KIT450 CNC LATHE

INSTALLATION MAINTENANCE MANUAL

(FANUC Oi-TB)

VERSION No. : 1.1

KIA HEAVY INDUSTRIES

PREFACE

This manual provides step by step informations for the operation and standard of KIT450

Always observe this manual to ensure proper operation and to lengthen the lifetime of Machine Tool.

We hope this manual could help users and people concerned with A/S. If you find any mistakes or anything in question, please let us to know.

May, 2003

KIA HEAVY INDUSTRIES

- The contents of this manual can be modified without any notice for improving the performance and in accordance with a design change.

PRINTED IN KIA

CONTENTS

Outline of the manual

1. Safety 5

1-1. General 7

1-2. General Safety Precautions 8

1-3. Notice when Operating the Machine 12

1-4. Notice when Repairing and Checking 16

1-5. Notice on the Electric and NC Devices 19

1-6. Safety Device 21

1-6-1. name plates 21

1-6-2. Safety Device 22

1-6-3. Door Lock System(Applicable only to the C.E) 22

1-7. Precautions on Safety 23

1-7-1. Door Interlock 23

1-7-2. HYD pressure switch 25

1-7-3. Pressure switch for the confirmation of the operation of lubricant 25

2. Specification 27

2-1. Outlines of machine 29

2-2. Specification of machine 30

2-3. N/C Specification 32

2-4. Part names 35

2-5. Major specification 36

3. Installation 43

3-1. Installation of machine 45

3-2. Lubrication and oiling 54

3-3. Cutting oil 56

3-4. Before test operation 58

4. Maintenance 59

4-1. Regular check list 61

4-2. Safety operation 62

4-3. X and Z axis backlash adjusting method 64

4-4. Discharge of Lubricating oil 66

4-5. Hydraulic system 67

4-6. Hydraulic chuck 69

4-7. Electric parts layout 74

4-8. X and Z axis zero point adjustment 75

4-9. How to operate parts catcher (Option) 81

5. Alarm List 85

Outline of the MANUAL

This manual contains the followings for a proper use and overall understanding of this machine.

(1) NC device Operation Manual
Contains operating instructions.

(2) Installation & Maintenance Manual
Contains the periodic inspection aan the installation and maintenance instructions.

(3) Parameter List
Contains detailed parameters.

(4) Alarm List
Contains detailed alarm informations.

(5) Part List
Contains the details required to purchase the part.

(6) Electric Circuit Diagram
Contains electric circuit diagram.

The record of values including the "parameter table" enclosed here should be kept as it is necessary for maintenance and adjustment of machine.

Thank you

Safety

1-1. General

(1) The purpose of a safety notice is to avoid personal injury or damage to the equipment from accidental events.

(2) The expressions DANGER, WARNING or CAUTION used in this manual, have a special meaning, which is stated below:

⚠ DANGER	Failure to comply may result in personal death.
⚠ WARNING	Failure to comply may result in personal severe injury or lethal damage to the machine.
⚠ CAUTION	Failure to comply may result in personal light injury or damage to the machine.

(3) Read and observe instructions of the name plate on the machine. Also, do not change the position of the name plate or damage it. If broken, purchase it with the no. of item shown in Part List.

(4) Before servicing this machine, throughly be familiar with this instruction and the notice of nameplate.
We're not responsible for damage due to your careless use.

1-2. General Safety Precautions

⚠ DANGER

(1) Do not touch any device in the Electric Control Panel and Operating Panel and in which the mark ⚠ is located.

(2) Prior to operating the machine, always close the door and check if safety shield located. If the door opened, immediately turn off the main power.

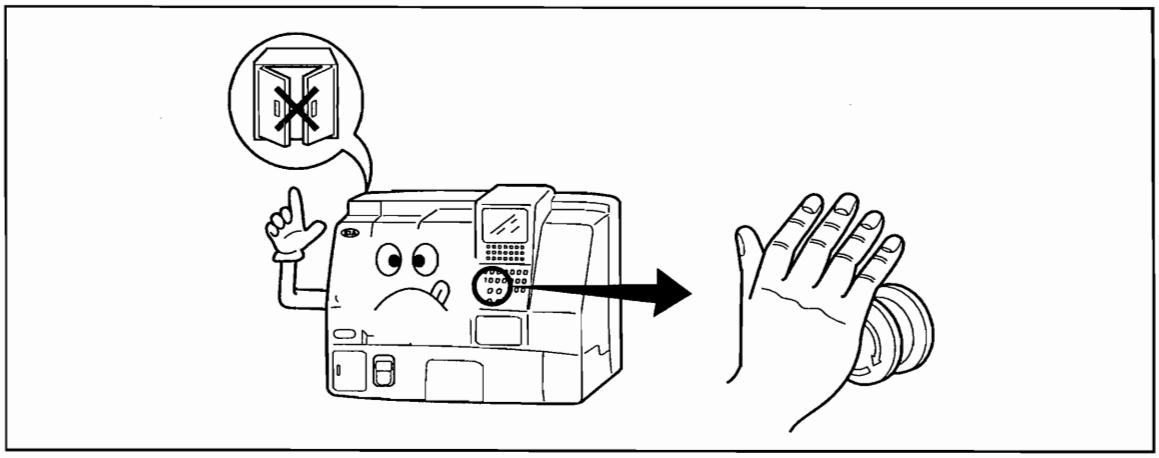

⚠ WARNING

(1) Remember where the Emergency Stop switch is to operate it anywhere at all times.

(2) Before operating the machine, check if the switches are functioned correctly to avoid malfunction.

(3) Never touch any rotating part or tool by hands while operating.

(4) Remove oil and water left on the floor to prevent workers from slipping.

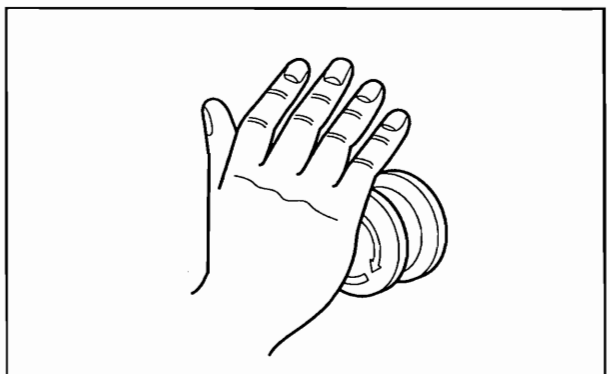

Figure 2-1. EMERGENCY STOP SWITCH

(5) Do not enter the inside of machine except for repairing work.

6) When temporarilly stopping a work and leaving the machine, first switch off the Operating Panel and then the main power.

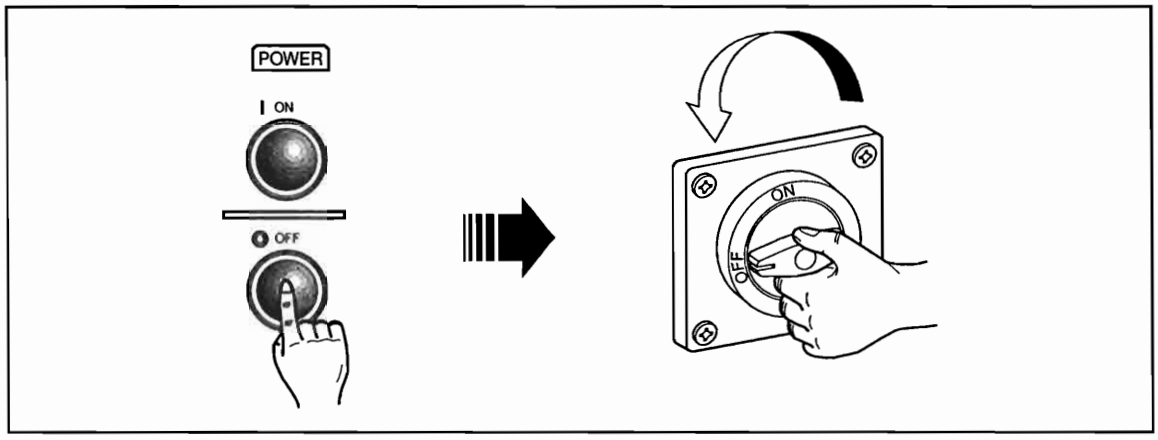

(7) When finishing a daily work and leaving the machine, switch off the Operating Panel, the main power switch, and then the power supply switch at factory.

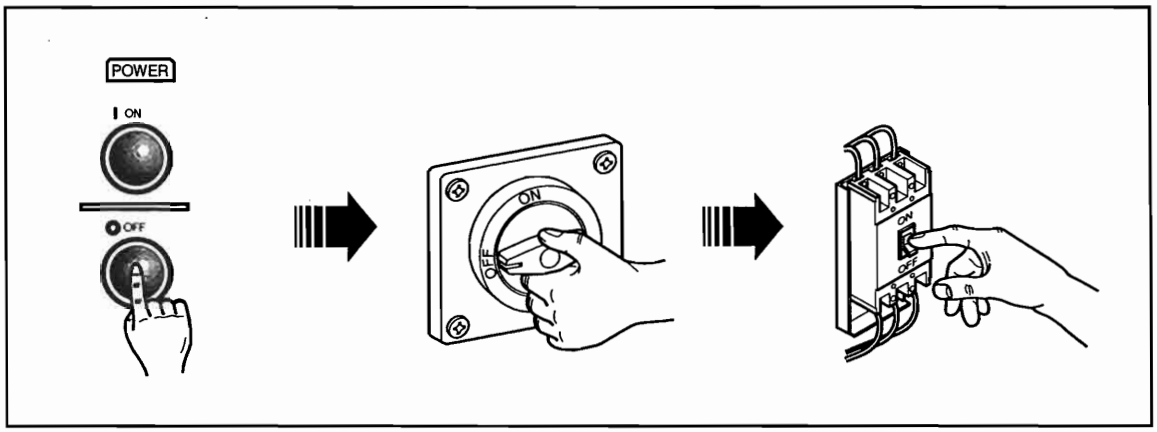

(8) It is dangerous to operate the machine when being operated or repaired by the other worker. Be careful when more than two people have to work together.

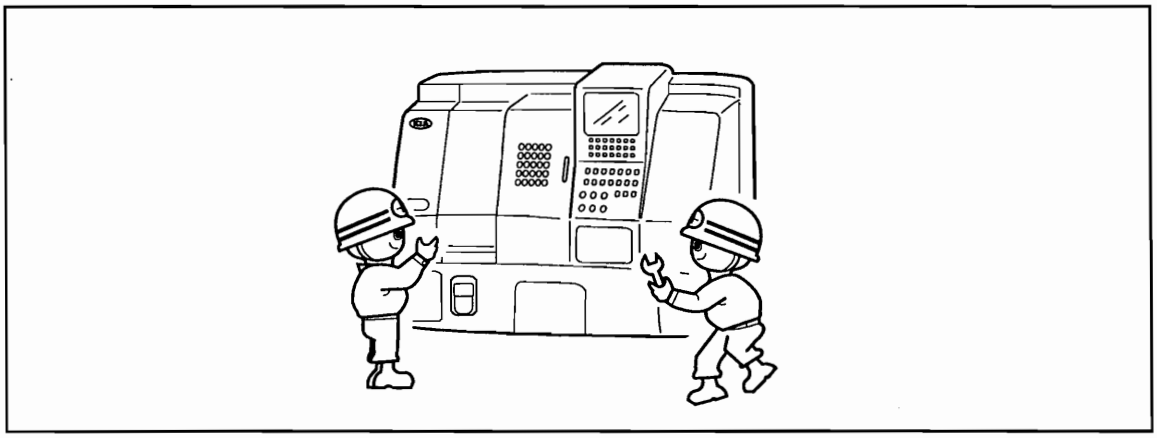

(9) There are potentially dangerous situations inside of the machine such as rotating workpiece, feeding tool post, dispersing coolant and hot chip. Always close the door of machine while operating.

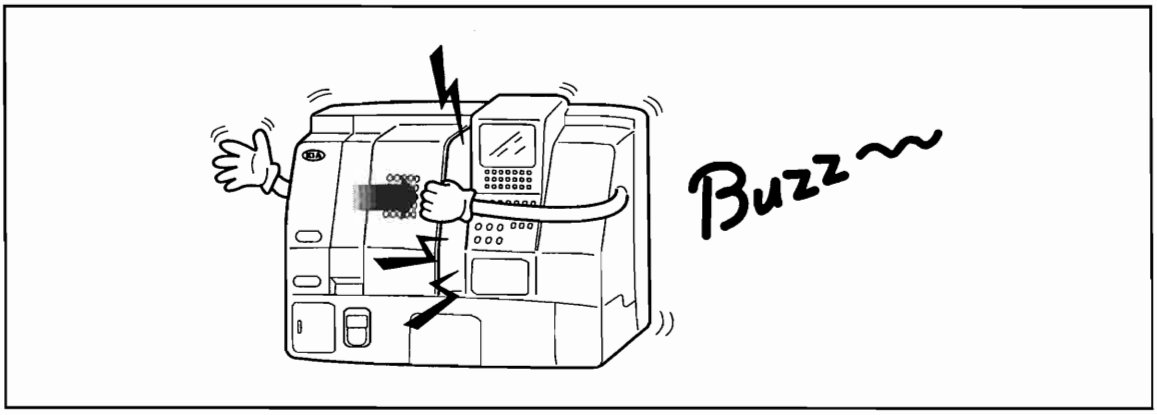

(10) Install the machine in a sufficiently bright, dry and arranged place free from any obstacles.

(11) Do not place device workpiece and other items either on the machine moving part or the machine frame.

(12) Do not reconstruct the machine without our prior permission.

⚠ CAUTION

(1) Check the machine regularly according to this manual.

(2) Always close the door during the automatic operation.

(3) Immediately turn off the main power during a service interruption.

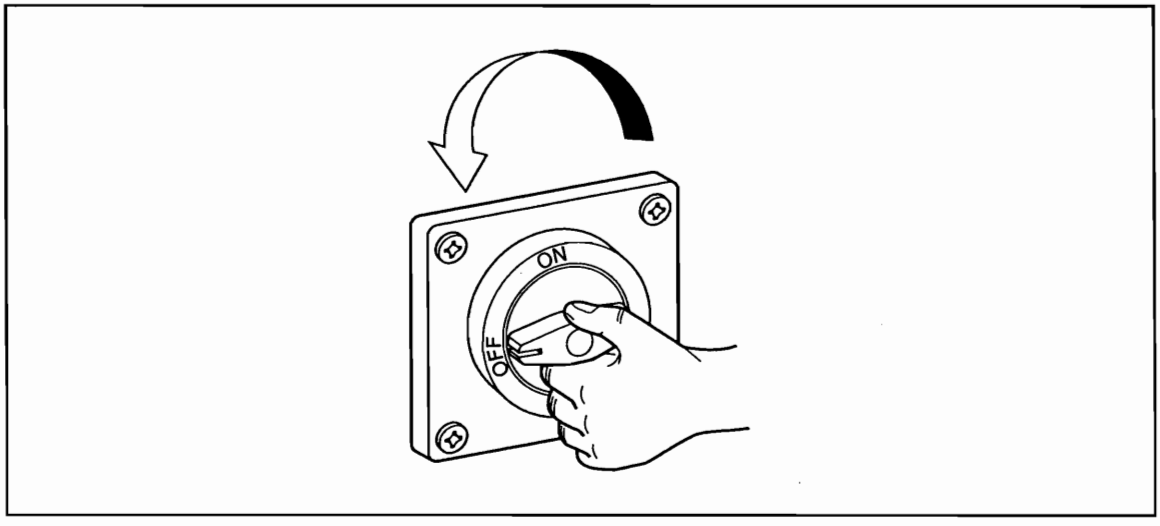

(4) Do not change the position of nameplate attached to the machine. If damaged, purchase it with the Item No. of Part List or one in the lower right of nameplate.

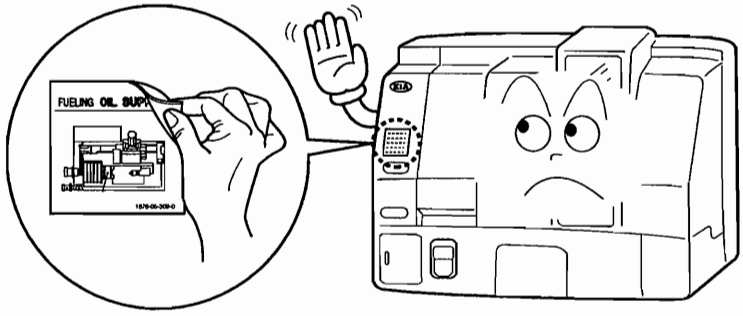

(5) Always wear protective glasses during working.

(6) Always wear safety shoes.

(7) Wear the safety cap and do not wear your uniforms loosely.

(8) Never operate the machine while wearing gloves.

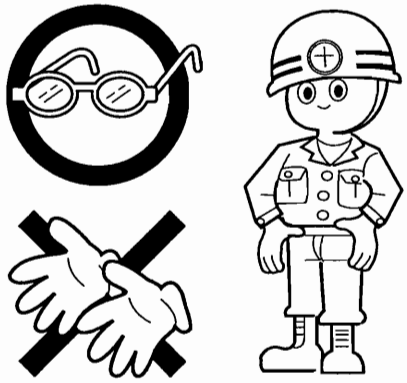

(9) Keep the workbench near the machine enough to be strong and not to be slippery.

(10) Do not operate the machine while drinking or taking a medicine.

(11) Do not operate the machine when feeling a sick or sleepy.

(12) The max. noise of this machine is approximately 76 db. it is recommended to wear earplugs.

1-3. Notice when Operating the Machine

Before operating the machine, make sure the followings.

⚠ WARNING

(1) Always close the door of the Electric Control Panel to avoid damage due to water, chip, or oil.

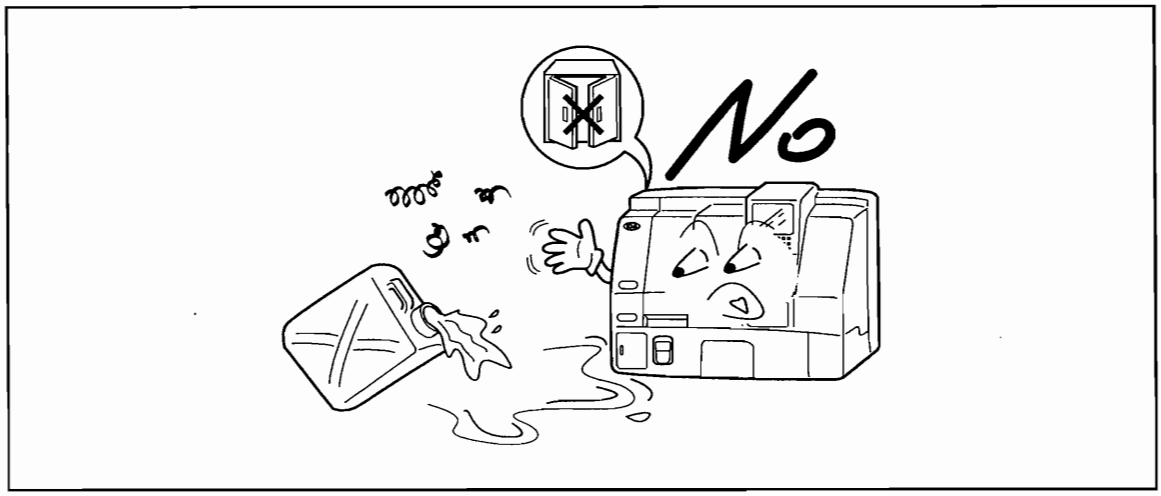

(2) It is dangerous to remove the chip attached or dropped to the tool with bare hands. Therfore, stop the machine and wear gloves and then do a job using brush.

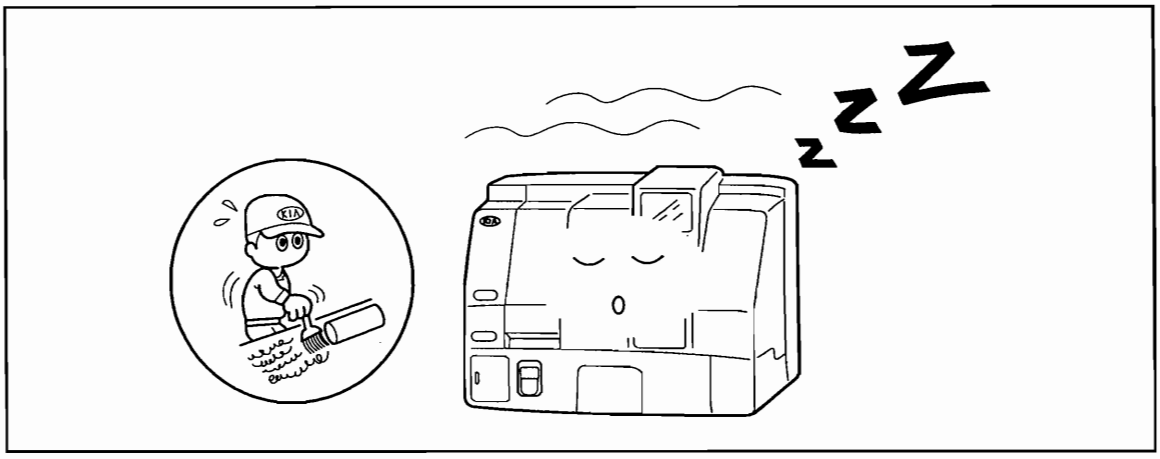

(3) Do not adjust the location of coolant nozzle while operating.

(4) Gradually increase the rpm of spindle to allow sufficient warming-up. Otherwise, it may result in damage of the chuck cylinder(Refer to Repair and Preservation, step 2-9/5 par. "A. warm up of spindle"(page Ⅴ-57)).

(5) Do not pull out or modify the instruments or electric circuits installed for a safety such as the stroke limit dog of feed system, the limit switch, the interlock limit switch, and etc.

(6) Check the belt for tension. Make it sure that your hands or fingers are not hold between the belt and the pulley.

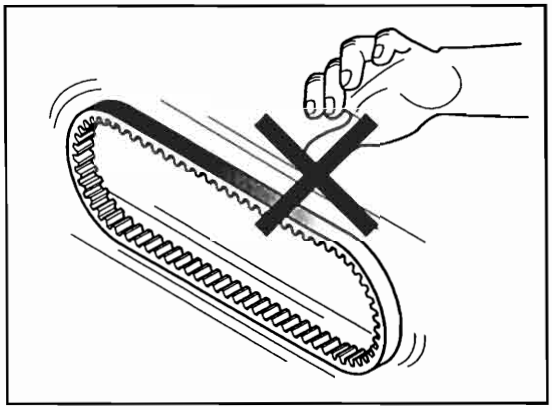

(7) Always clamp the workpiece or the tool exactly. For the cutting depth and feedrate, begin from the minimum level.

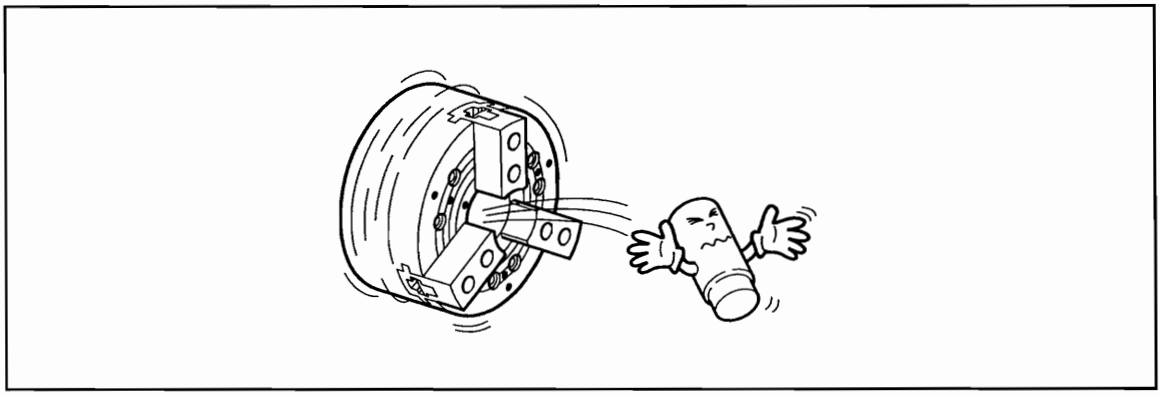

(8) When the machine rotated at a high speed, the clamping force of chuck will be decreased rapidly. Be careful to set up the pressure of chuck and cylinder.

(9) When chucking and centering the center workpiece, take care of its weight, the hole of center, configuration, and thrust of center. If centering and loading through a small hole, the lead-edge of center may be broken and the workpiece sprung out.

(10) When self Boring of the soft jaw, pay attention to the location of self Boring Ring and configuration of self Boring. After cutting the jaw, clamping the jaw correctly and check the pressure of chuck is proper.

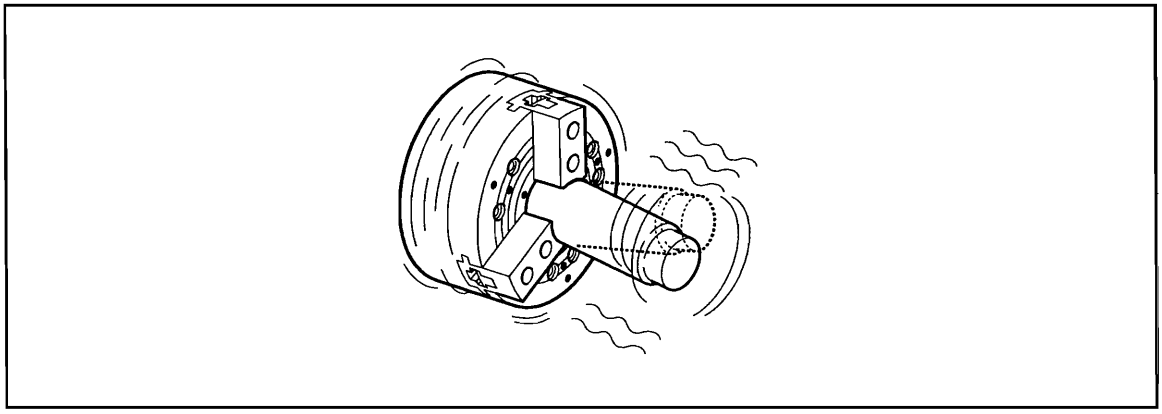

(11) If rotating the spindle when the center is not placed on the center of rotation and being eccentric, it may cause the machine itself vibration and affect its working accuracy. Keep its balance by attaching the balance.

⚠ CAUTION

(1) Do not touch kinds of switch with wet hands.

(2) While heavy cutting, a fire can happen due to a hot chip. Make it sure the chip not to be accumulated.

(3) Check each bolt is clamped properly.

(4) Check there is a strange sound from the motor or anywhere else on working.

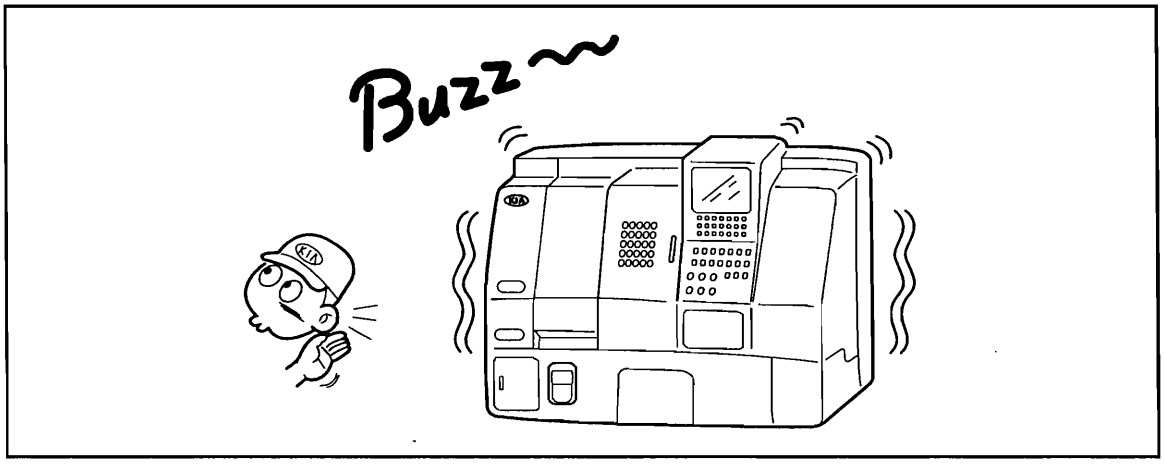

5) Warm up the spindle and feed system prior to operating.

(6) When installing the tool, stop the feeding axis and the spindle.

(7) When installing the tool, pay special attention to the edge of tools. Install it not to be protruded over the specified length.

(8) After installing the tool, first perform a test operation.

(9) When installing the workpiece on the standard chuck, make the outer circumference of jaw positioned in the external diameter of chuck.

(10) Visually check the switch on the Operating Panel and then operate it correctly.

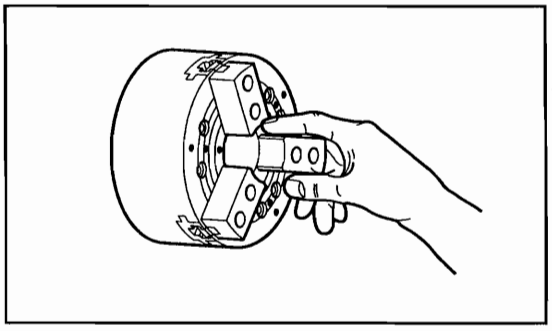

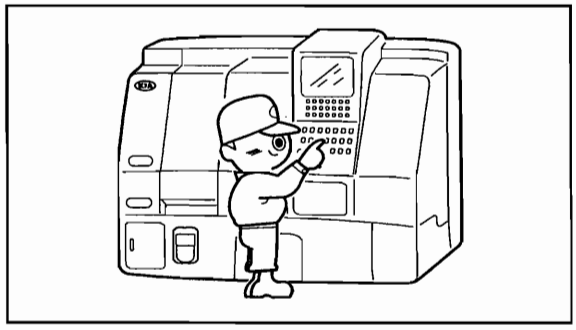

(11) Check the pressure gage indicates correctly.

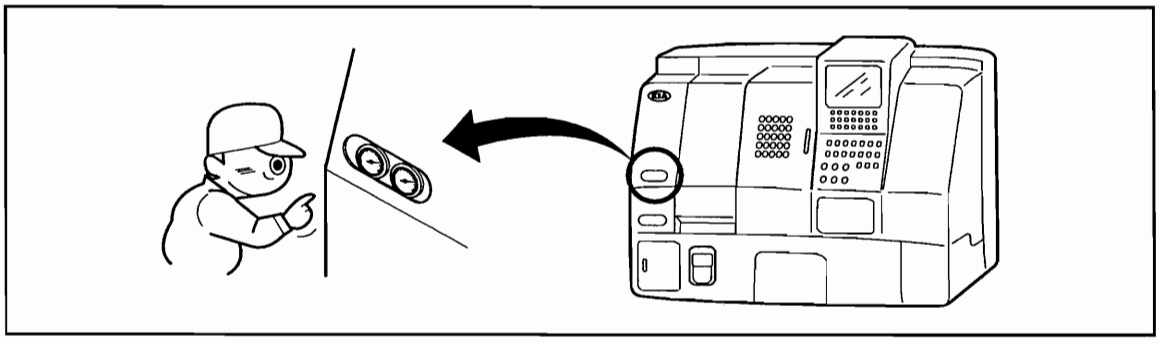

(12) For the machine with special accessory, follow the specified instructions.

1-4. Notice when Repairing and Checking

After reading this manual thoroughly, perform the maintenance.

⚠ DANGER

(1) Before repairing the machine, always ensure the main power is off.

(2) For a while even after the power off, always check there is residual current in the Electric Control Panel and the Electric device and then perform the maintenance.

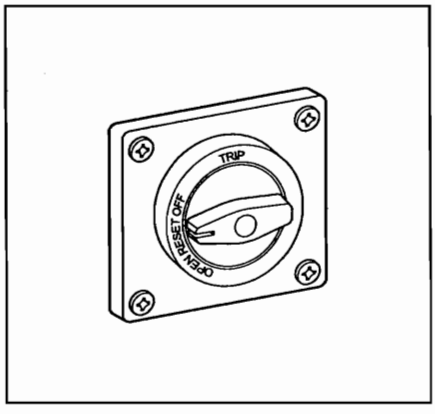

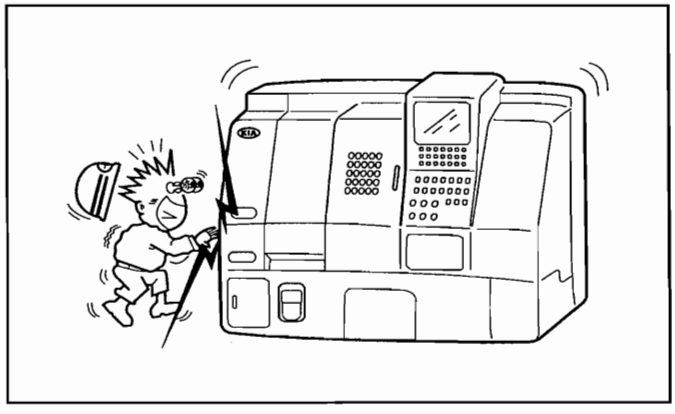

(3) Open the door of the Electric Control Panel only for repairing.

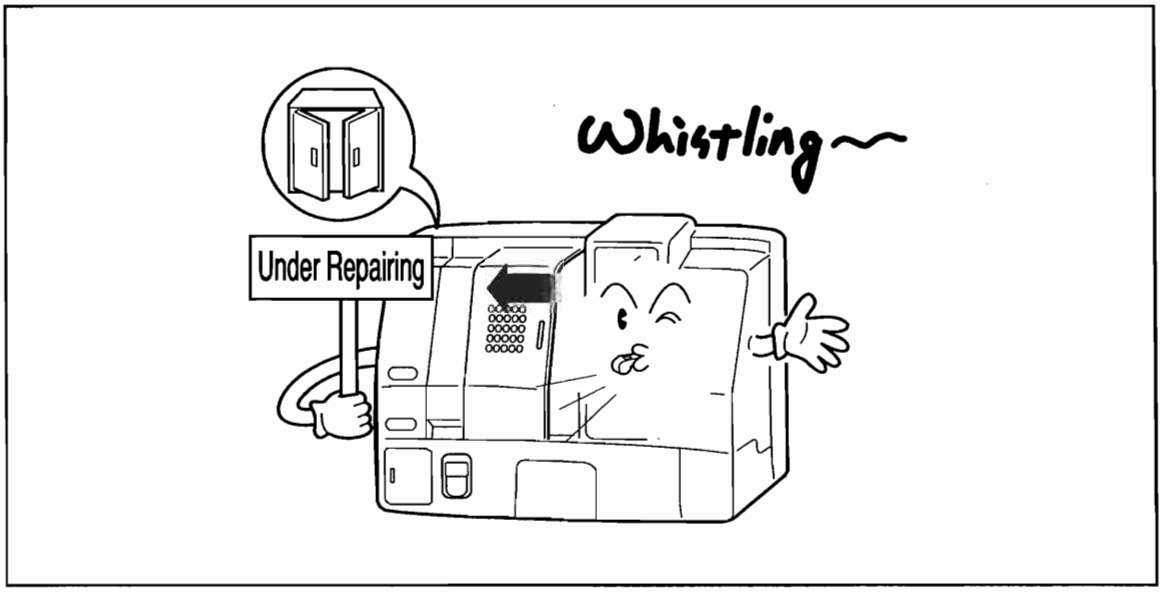

⚠ WARNING

(1) Only the qualified personnel can perform maintenance on the electric device.

(2) When cleaning the machine, always stop its operation, turn OFF and then lock the main power.

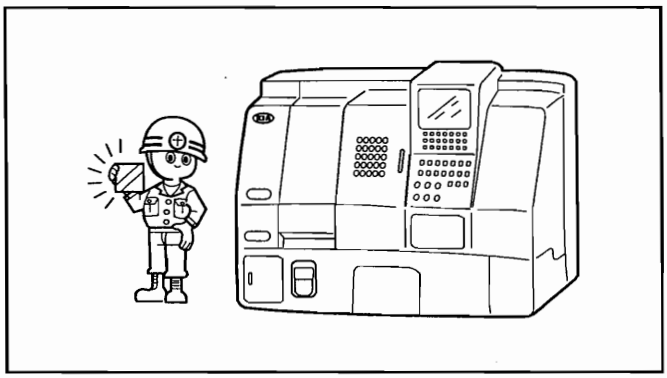

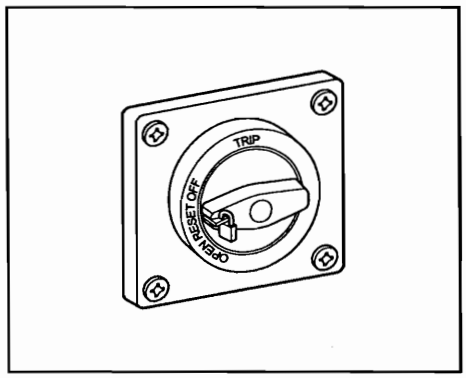

(3) When repairing and cleaning the machine, do not use compressed air.

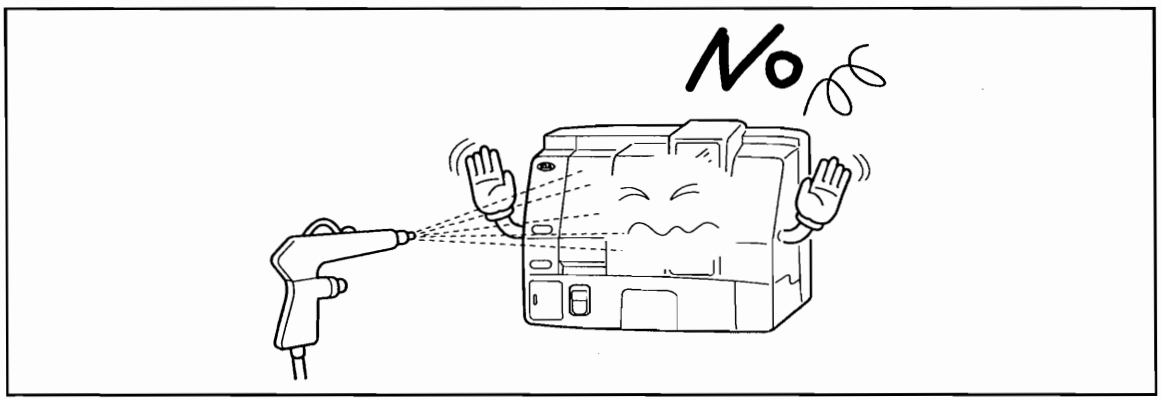

(4) When repairing at a high place, use a proper support or ladder and wear a safety helmet.

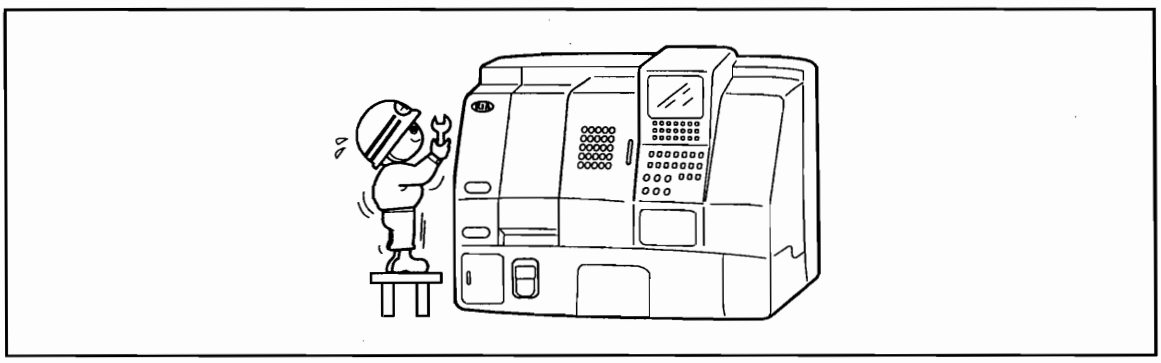

(5) Never operate the machine with the cover removed for repairing.

(6) While repairing or cleaning the machine, keep the floor free from water or oil.

⚠ CAUTION

(1) Before repairing, completely read the Installation and Maintenance Manual.

(2) Keep enough parts in stock for reparing and replacing.

(3) The person who responsible for maintenance should obey the instructions on the machine.

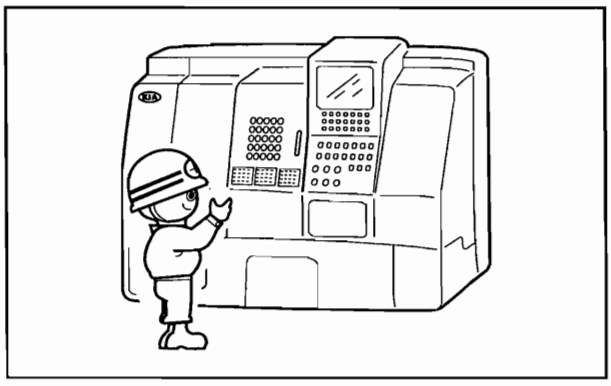

(4) Clean the machine after a completion of daily work to make it easier to find out anything wrong.

(5) When repairing, record the work.

(6) Do not attempt to remodel the device or electric circuit such as the switches for stroke limit, or interlock of the machine.

(7) Check each gage indicates its normal value.

(8) Check the lubricating oil is supplied for each wet moving part.

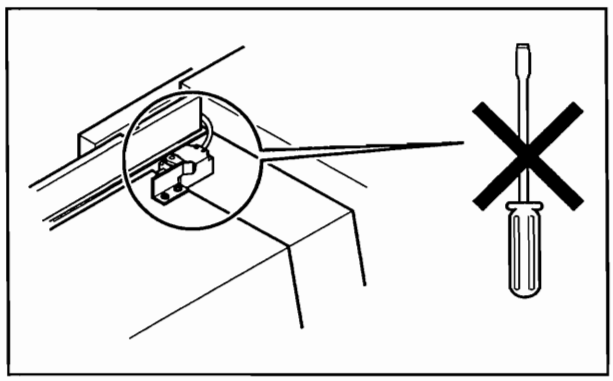

(9) Only use the specified hydraulic and lubricating oils and greases in this manual.

(10) When cleaning the chip, always wear gloves.

(11) Filling and changing oil should be performed periodically according to this manual.

(12) Apply each part with rust-proof oil after a completion of work, especially if using the soluable coolant.

(13) Use the specified spanner or wrench when adjusting and repairing the machine.

1-5. Notice on the Electric and NC Devices

⚠ DANGER

(1) Do not give a shock on the NC device and the Electric Control Panel, etc.

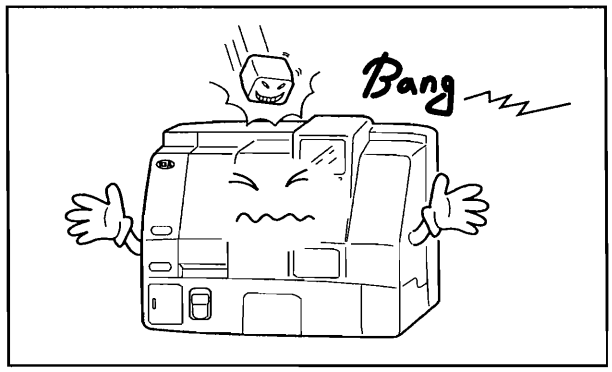

(2) In case of the power cable, use it with the same thickness provided in this manual, and do not use longer cable than needed. When the power cable has to be passed the floor, be sure to prevent it from being damaged by chips.

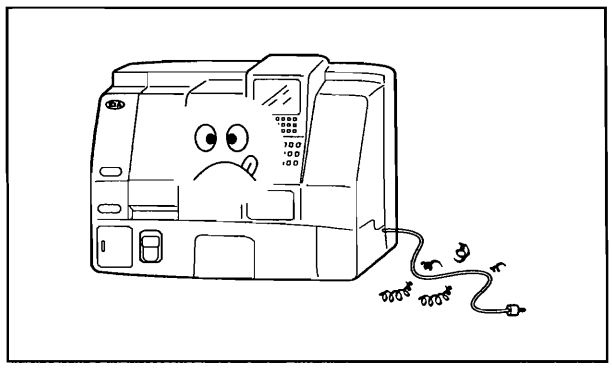

(3) In case of test operation, check the parameter of NC device is set properly with our instructor attended. Also, do not change any parameters except one for backlash.

⚠ WARNING

(1) The Electric Control Panel is sealed to prevent the ambient air from entering. Do not open the door of Control Panel for long while applying the power. Direct ray of sun or flash of camera may result in damage of the part.

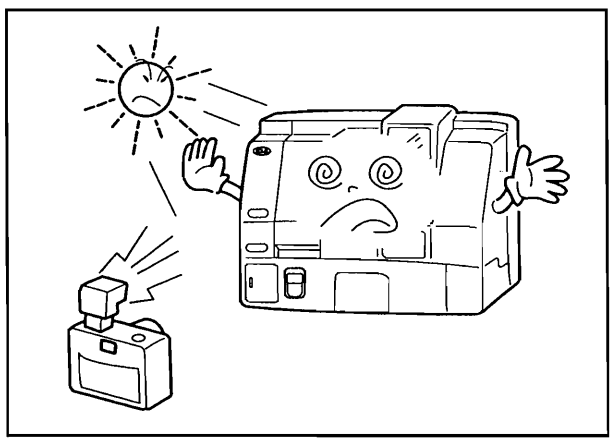

(2) The instruments specified by our company should be used in the Electric Control Panel. Especially use the specified fuse and never use that of great capacity or a copper wire.

(3) When repairing the electric instrument, switch OFF the power of the Opreating Panel. Also switch OFF the Electric Control Panel and then the Power Supply at factory.

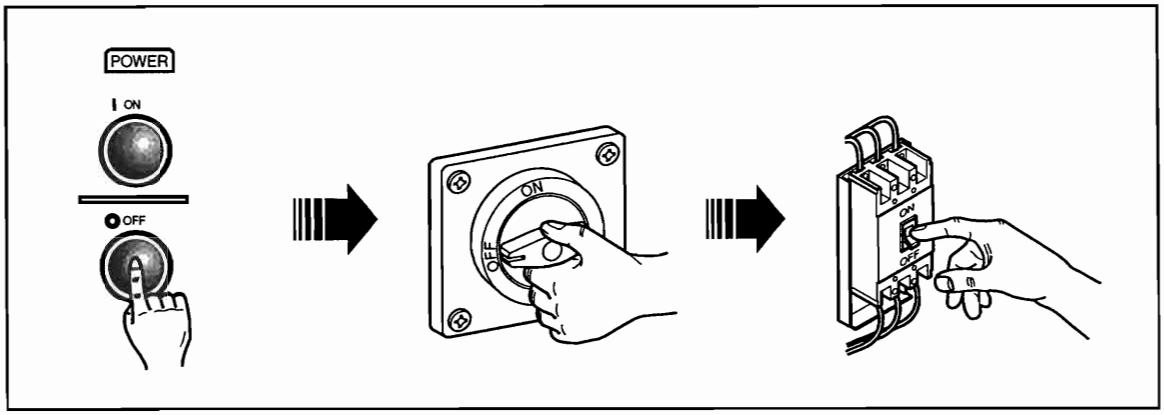

(4) Do not change a current setting of the overload relay in the Electric Control Panel and any settings of various volumes.

⚠ CAUTION

(1) Do not open the door of the Electric Control Panel or the Operating Panel, if possible. The penetration of foreign material or humidity may result in misoperation.

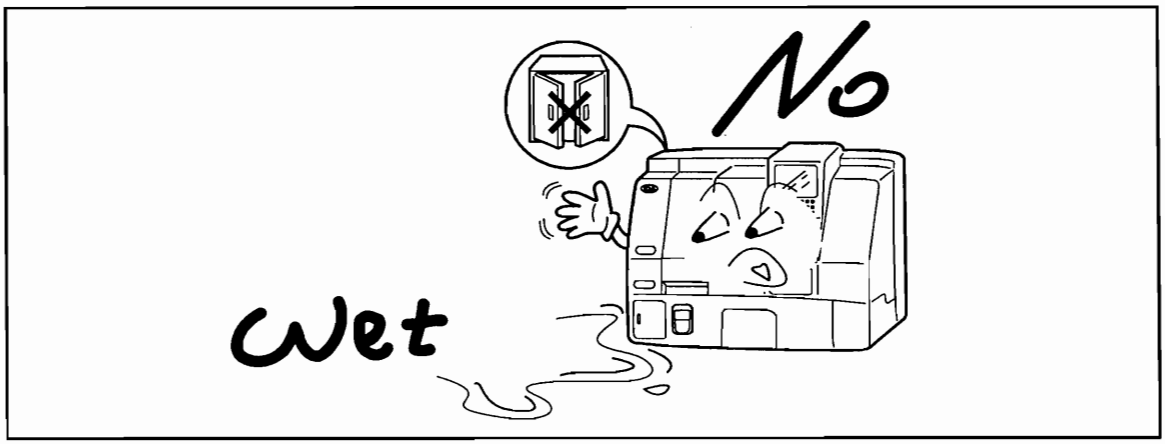

(2) Special care should be taken in handling the electric instrument of the body.

(3) Clean the fan and filter in the Electric Control Panel regularly.

(4) Check the no. of program on the screen of the Operating Panel.

1-6. Safety Device

1-6-1. name plates

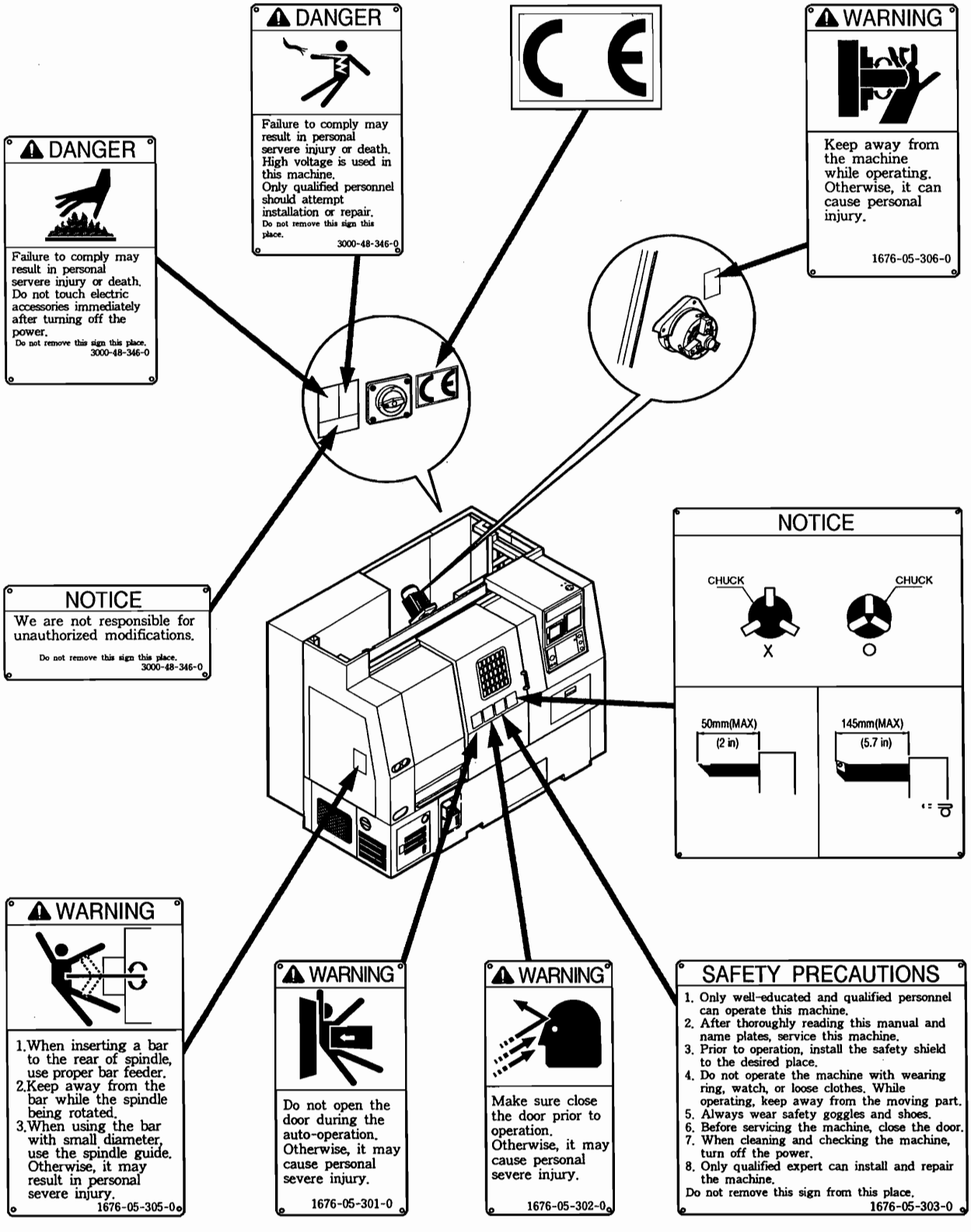

1-6-2. Safety Device

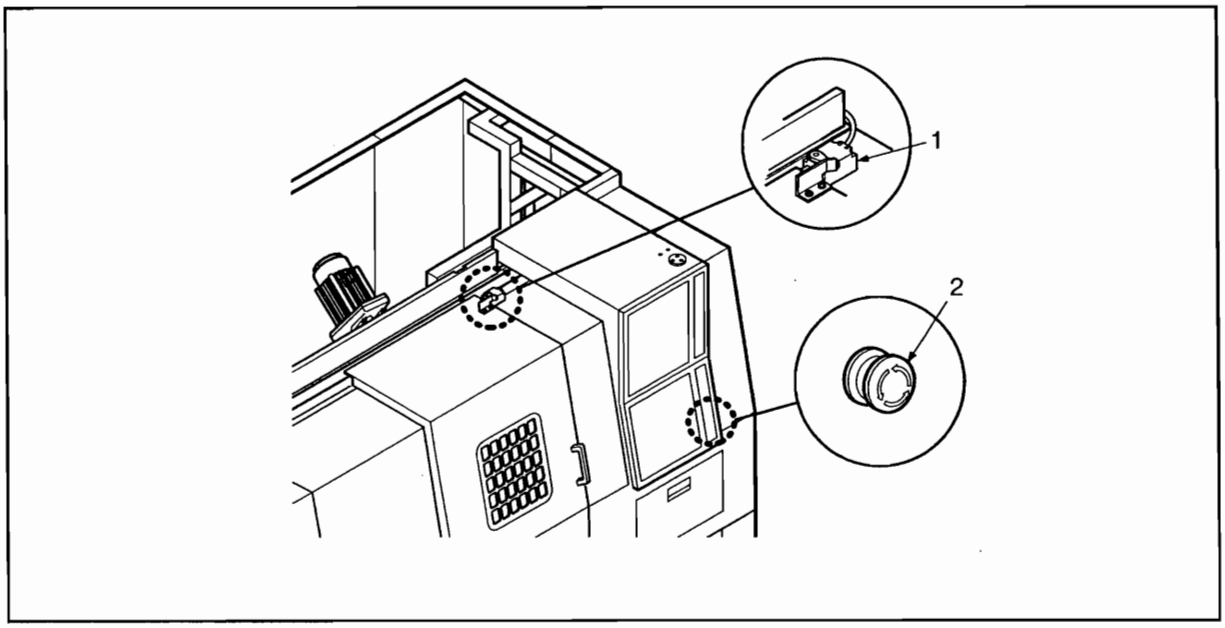

No.	Name	Function
1	Door Lock System	If the door opened while operating the machine, it may be in Emergency Stop state.
2	Emergency Stop Switch	If pressing this switch, all operating parts except hydraulic ones will be stopped.

1-6-3. Door Lock System(Applicable only to the C.E)

⚠ WARNING

Set the "LOCK/UNLOCK" switch of door lock system to "LOCK".
If setting it to "UNLOCK", it may allow the door to be opened while operating and cause serious risks.

1-7. Precautions on Safety

1-7-1. Door Interlock

1. Door Interlock Switch

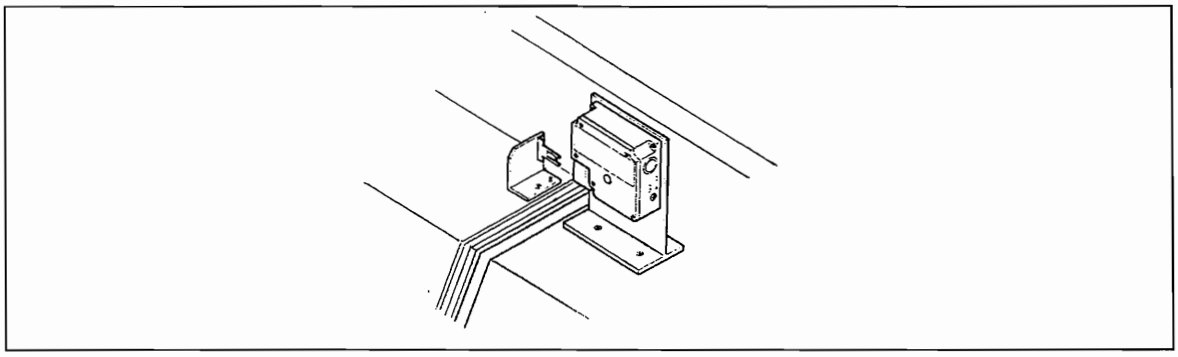

2. Interlock

1) Limit Switch Release SQ1 on Condition

Only in case of all the internal moving parts of machine stopped. it's 'on'.

- Program stop
- Spindle and each axis stop
- Cutting oil and Airblow stop
- Interlock release switch on

2) In case of opening door with pressing Interlock Release button while program operating.

- Program keep executing
- Main Spindle rotates under 50rpm
- Prohibit rapid travel of all the axes.
- Cutting oil Airblow stop

if turn off switch and close door.

- Main Spindle and each automatically return to programmed speed
- Cutting oil can be operated again manually

3) If the door oper(Interlock Release switch off or unlock) during executing program, it becomes emergency state and rapidly stops all the internal moving parts of machine.

- Main Spindle and each axis stops rapidly
- Cutting oil and Airblow stop
- Chip conveyor stop
- Oil hydraulic pump keeps operating

〈Table〉 Interlock and operation mode O : Normal operation

	Interlock Release Condition (sol on)		Door open during Program operation		Manual operation		remarks
	Release S/W off	Release S/W on	Release S/W off	Release S/W on	Door closed	Door open	
Program	stop	O	Emergency STOP	O			
Main Spindle	↑	under 50rpm		under 50rpm	O	under 50rpm	
Axis(X,Z)	↑	rapid travel off		Rapid travel prohibited	O	Rapid travel prohibited	
Cutting Oil	↑	stop		stop	O	O	
Airblow	↑	↑		↑	O	O	
Chip Conveyor	O	O		O	O	O	
	↑①		↑②	↑③			

① It works only in state of all the intermal moving parts ofmachine stopped.

② Oil hydraulic pump keeps operating

③ Main spindle and every axes automatically return to programmed speed.

〈Note 1〉 The door doesn't open in case of CRT power off. If you want to open the door by force. first turn the Lock/Unlock s/w on the Interlock device to unlock and then open the door.

〈Note 2〉 In unlock state, the operation mode of door interlock isn't effective (That is. Door Interlock doesn't work. so you must operate machine after selecting lock position.)

This company is not responsible for the danger caused by your try to remodel and disassemble interlock switch of door.

⚠ CAUTION

Don't open the door because all the functions become an emergency stop state if the door is open during automatic operation.

1-7-2. HYD pressure switch

The hydraulic system of this machine is set to maintain hyd-pressure 10kg/㎠ (1.0MPa). when the hyd-pressure is below 10kg/㎠(1.0—MPa). ALARM "AL-04 HYDRAULIC ALARM" is displayed on the CRT and the machine is stopped. At that time. check the hyd-pressure system.

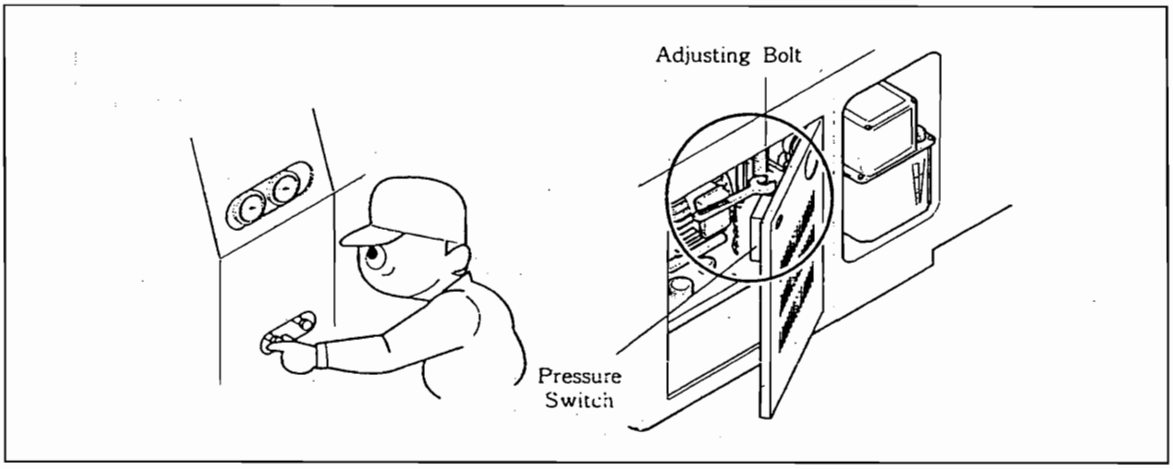

ALARM. MESAGE

AL-04 HYDRAULIC ALARM

1-7-3. Pressure switch for the confirmation of the operation of lubricant

This swich can check whether lubricant is supplied to the each supply point of the machine. When abnormalities in the lubricating system are detected. ALARM "AL-03 LUBRICATION ALARM" is displayed on a CRT and the machine is stopped. At that time. check the lubricating PUMP and the conditions of piping.

ALARM. MESAGE

AL-03 LIBLICATION ALARM

⚠ CAUTION

When this ALARM is rised during the machining. the machining shall stopped after finishing the current machining

Specification

2-1. Outlines of machine

This machine is a 2-shafts simultaneous control type N/C lathe having linear table and characterized by the following features.

1. Chuck work is possible
2. Stepless speed change is possible in wide range by the use of AC converter motor.
3. The basic permanent set makes it possible to machine various kinds of workpieces with same setting, and to use such machines as available in the market.
4. Constant feedrate function is adopted as a basic option.
5. This machine is equipped with self-diagnosis function.
6. Integration of both electric and mechanical parts enables this machine to be installed on the limited space. The slant bed improves the workability of spindle If optional parts are installed, the machine has wider range of workability.

Outline of body frame

1. Spindle

   Spindle automatically changes its speed in the range "50~6,000rpm" by use of AC motor.

   Low speed ranges "30~3,000rpm" and "40~4,000rpm" are optionally available which enable medium rate cutting at low speed. And AC converter motor makes it possible to keep the speed constant.

2. Table

   T-gloove shaped table is 200 wide and 550 long, and up to six tools can be conveniently mounted and dismounted on this table.

2-2. Specification of machine

KIT450 GANG TYPE CNC LATHE

ITEM		Unit	Size
Capacity	Max. Swing	mm	530
	Outer diameter of check		165
	Standard machining dia		165
	Max. machining length		190
	Bar capacity		44
Main Shaft	Spindle pass-through hole		52
	Rotational speed	r.p.m	50~6,000
	Motor output	Kw	11/7.5
Feed	X axis stroke	mm	400
	Z axis stroke		250
	X axis rapid feed	mm/min	30,000
	Z axis rapid feed		36,000
	X axis motor	Kw	1.5
	Z axis rapid feed		1.5
Bed Type			60°
Controller			FANUC Oi-TB
Installation Area		mm	2.100×1.440
Weight		Kg	2,700

※ This specification is subject to change for improvement of performance without notice

Standard parts

ø165 solid chuck	1 set
Soft jaw	1 set
Lighting equipment	1 set
Cutting oil equipment	1 set

Leveling seat	1 set
Spanner wrench	1 set
Chip box	1 set

Special parts

- Chip conveyor(right)
- Chip conveyor(rear)
- Chip wagon
- Air blow
- Coolant gun
- Spindle inner coolant
- Chuck upper coolant
- TR robot
- RE robot
- Chuck open/close checker
- Chuck pressure 2-step exchange
- Spindle positioner
- Auto Door
- Spindle inner stopper
- Spindle rpm meter
- Work counter
- Accumulative timer
- Auto power breaker
- Weekly timer
- Workpiece attachment checker

2-3. N/C Specification (FANUC Oi-TB)

1) Standard Specification

Control axis	X, Z Axis simultaneous two axes
Interpolating function	Location(G00), Straght interpolation(G01), Arch interpolation(G02, G03)
Command Type	Absolute/Incremental
Minimum setting	0.001mm/0.0001 Inch
Tape Code	EIA/ISO Code
Maximum command value	Minimum setting unit×99999999
Tool correction	±999.999mm(±99.9999 Inch)
Number of tool corrections	32 Set(64EA)
Feedrate range(Feed per rpm)	0.0001~500.000mm/rev
Rapid feed Override	1%, 5%, 50%, 100%
Feedrate Override	0~200%
Maximum feedrate	X Axis 30~30000mm/min Z Axis 30~36000mm/min
Screw cutting	
Variable-lead Thread cutting	
Backlash correction	0~255 Pulse
MDI/CRT Display	9 Inch Mono CRT(512 characters)
Indication of/search for program No.	1~9999
Indication of/search for program No.	1~9999
Label Skip	
Manual pulse generator	1/1, 1/10, 1/100

Leader/Puncher interface	RS232C
Single type fixed cycle	G90, G92, G94
Estabilishment of coordinate system	G50
Estabilishment of automatic coordinate system	
Memory and editing of tape	320m
Automatic acceleration/deceleration	
Measured correction value direct input A	
Position coder	6000rpm
Constant speed control	G96 S×××
Manual absolute coordinate ON/OFF	
Decimal point input/pocket caculator	
type decimal point input	
Single block	
Block skip	
Machine lock	
Optional stop	
Dry run	
Program check	Dry run+Spindle Stop+Coolant Stop
Number of registered programs	200EA
Data protector key	
Self-diagnosis function	

Emergency stop	
Travel beyond the sfecified stroke	
Stored stroke check	
Interlock	
State output	
Returning referance point	G27, G28, G30
Dwell	G04
Inch/Metric conversion	
Complicated fixed cycle	
Pitch error correction	
Tool shape and correction of abrasion	
Tool end radius correction	
Custom macro	
Operation time, number of work pieces	
Search for external program	1~9999
History of alarm	
Background edit	
History of operation	
Tool life management	
Graphic Function	

2) Optional Specification

Spindle 5' Index Function	
C-AXIS	

2-4. Part names

① Electric Control Panel	⑨ Rotary Cylinder
② Z axis Servo Motor	⑩ Lubricating Pump
③ X axis Servo Motor	⑪ Head stock
④ Saddle	⑫ Hydraulic chuck
⑤ Bed	⑬ Table
⑥ Coolant Motor	⑭ Cross Slide
⑦ Spindle Motor	⑮ Coolant Tank
⑧ Hydraulic Mnit	

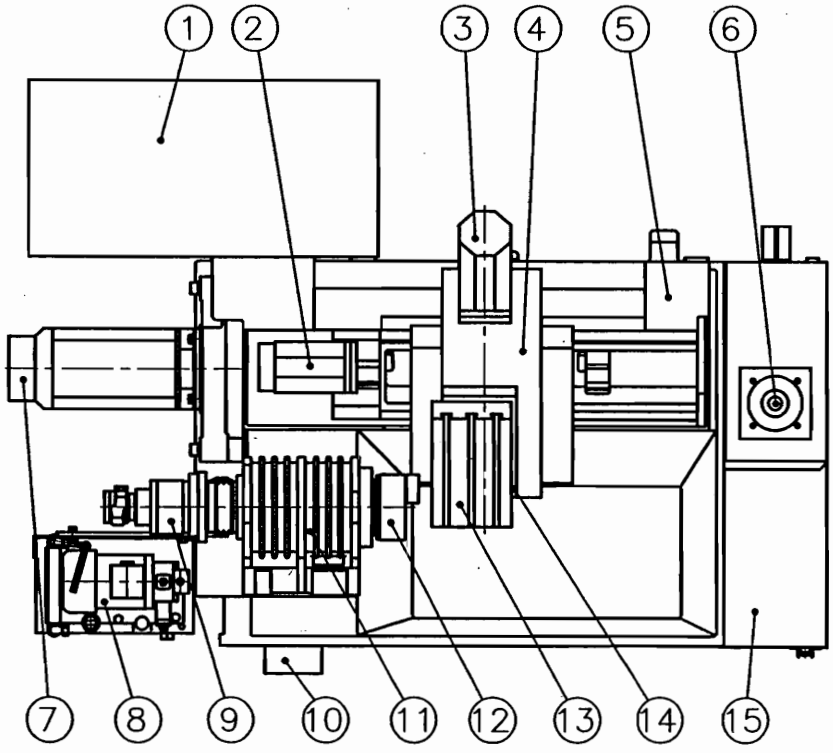

2-5. Major specification

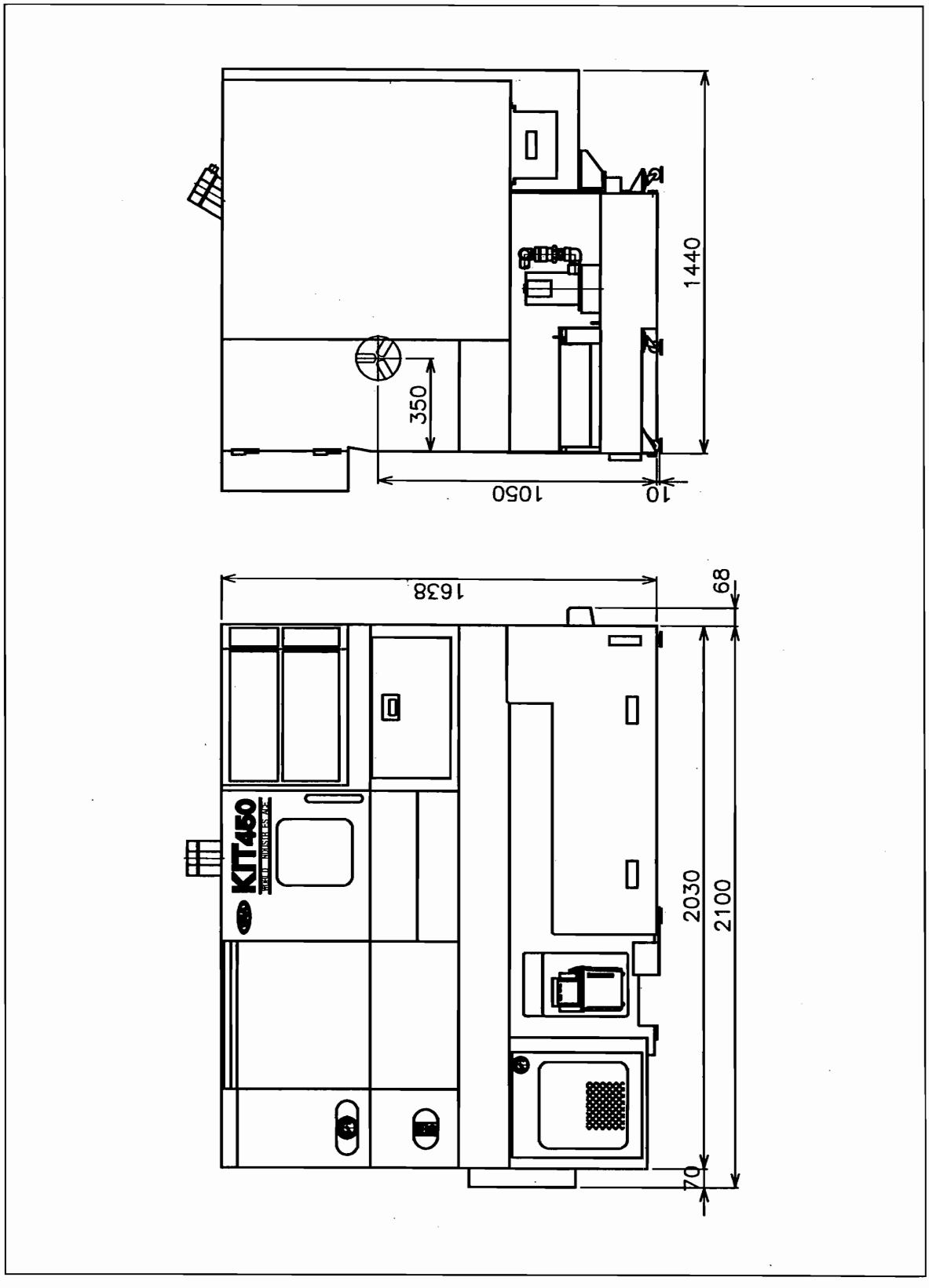

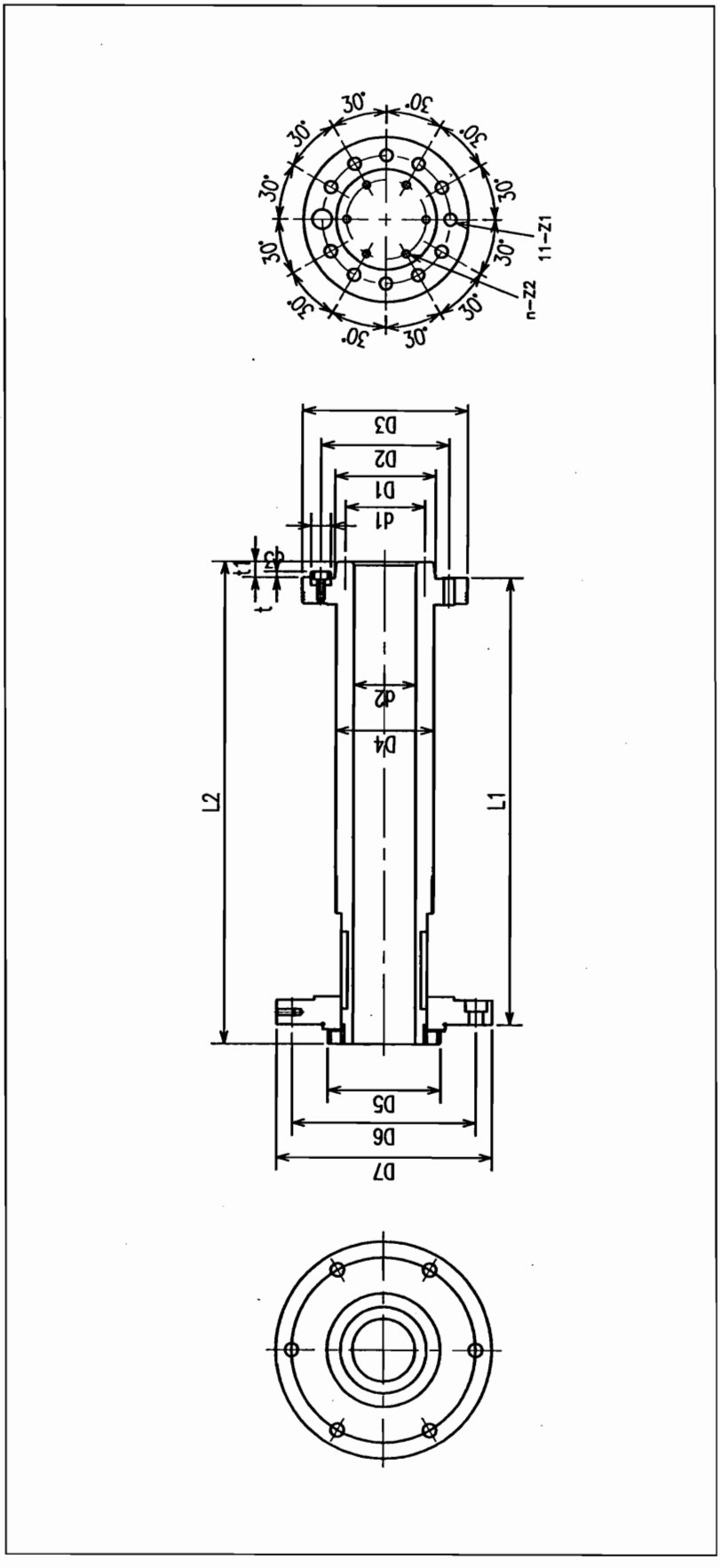

주축단	D	D1	D2	D3	D4	D5	D6	D7	d1	d2	d3	t	t1	t2	t3	t4	L1	L2	Z1	n-Z2
A-5	82.563	65	104.8	135	80	87	150	176	50	46	15.88	4.75	13	22.5	4	20	446.2	487.2	M10	8-M6

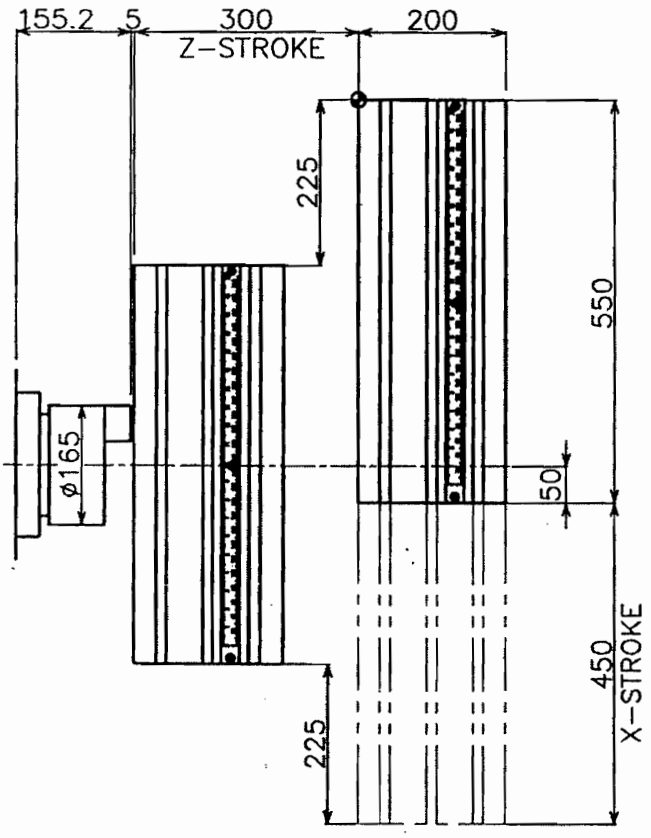

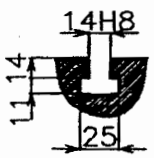

T-groove Detailed Drawing

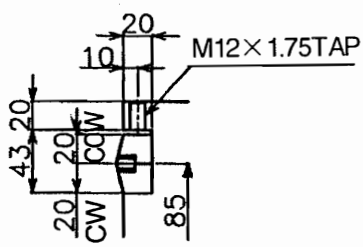

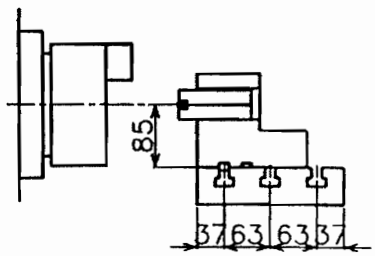

Tool Holder Detailed Drawing
(CW. CCW Common use)

Solid chuck(STD)

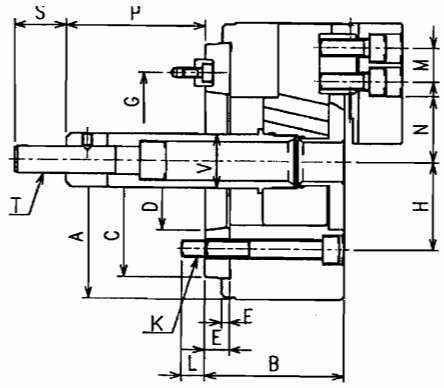

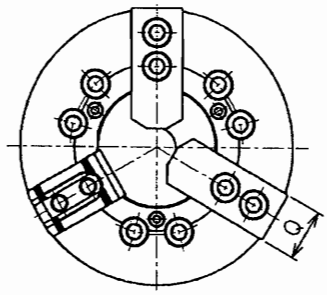

SYMBOL	QUANTITY	SYMBOL	QUANTITY
A	165	N MAX	37.8
B	85	N MIN	33.5
C	140	O MAX	16
D	82.557	O MIN	11.8
E	15	P MAX	84.5
F	5	P MIN	64.5
G	116	Q	31
H	104.78	R	12
J	21	S	36
K	6×M10	T	M16
L	14	U	5
M	20	V	34

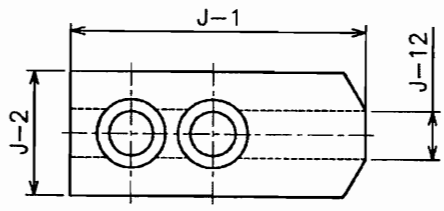

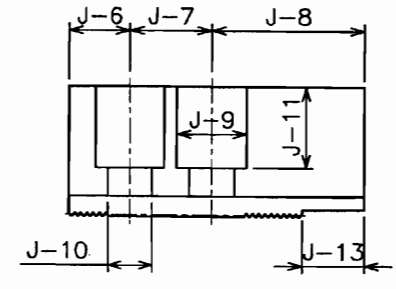

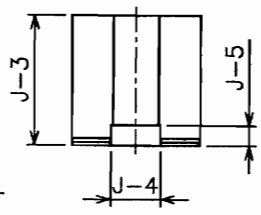

SYMBOL	QUANTITY
J-1	72
J-2	31
J-3	32
J-4	12
J-5	5
J-6	15
J-7	20
J-8	37
J-9	17
J-10	11
J-11	20
J-12	12
J-13	15

Hollow chuck(Special parts)

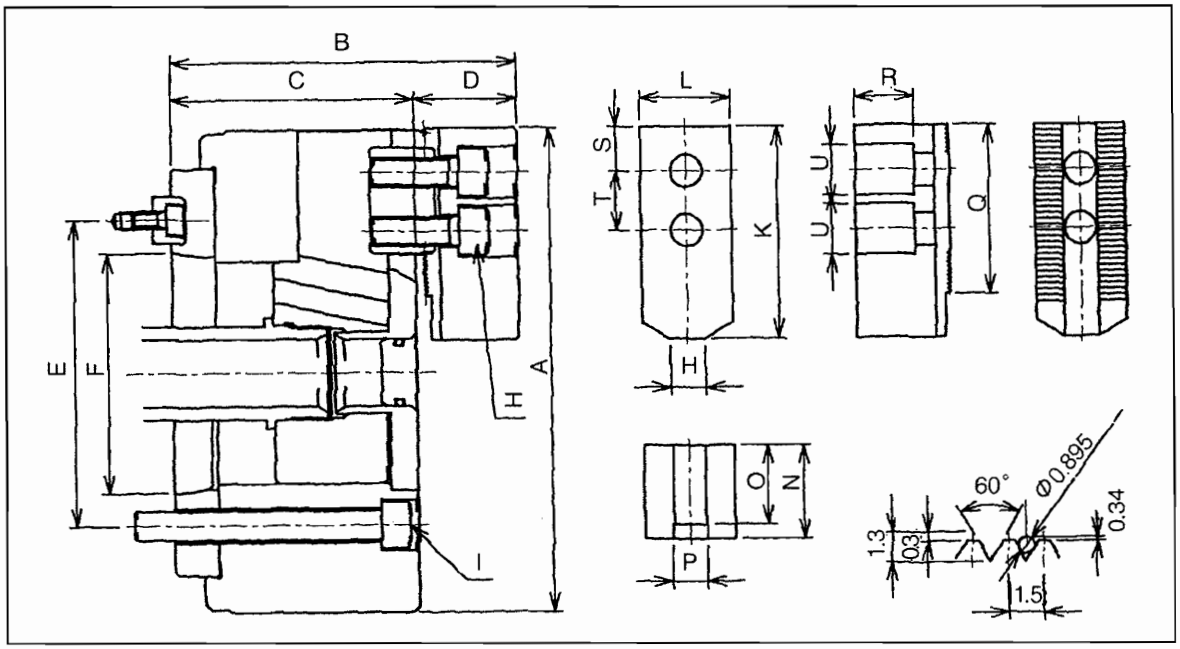

SYMBOL	S M I	SAMWOO
A	Φ168	Φ169
B	122	120
C	90	91
D	32	29
E	Φ110	Φ110
F	Φ82.563	Φ82.563
G	Φ45	Φ45
H	M10×25	M10×25
I	M10×95	M10×95
K	66.5	66
L	35	30
M	6	5
N	28	28
O	23	23
P	12	12
Q	66.5	54
R	18	16
S	15	12
T	20	20
U	Φ17.5	Φ17

No.	Drawing and part No.	Part	Q'ty
1	1725-11-201-0	FLANGE, CYL	1
2	SM1101010030	SCREW HEX SOCKET	6
3	SM1101010030	SCREW HEX SOCKET	6
4	1344-11-301-1	DRAW BAR	1

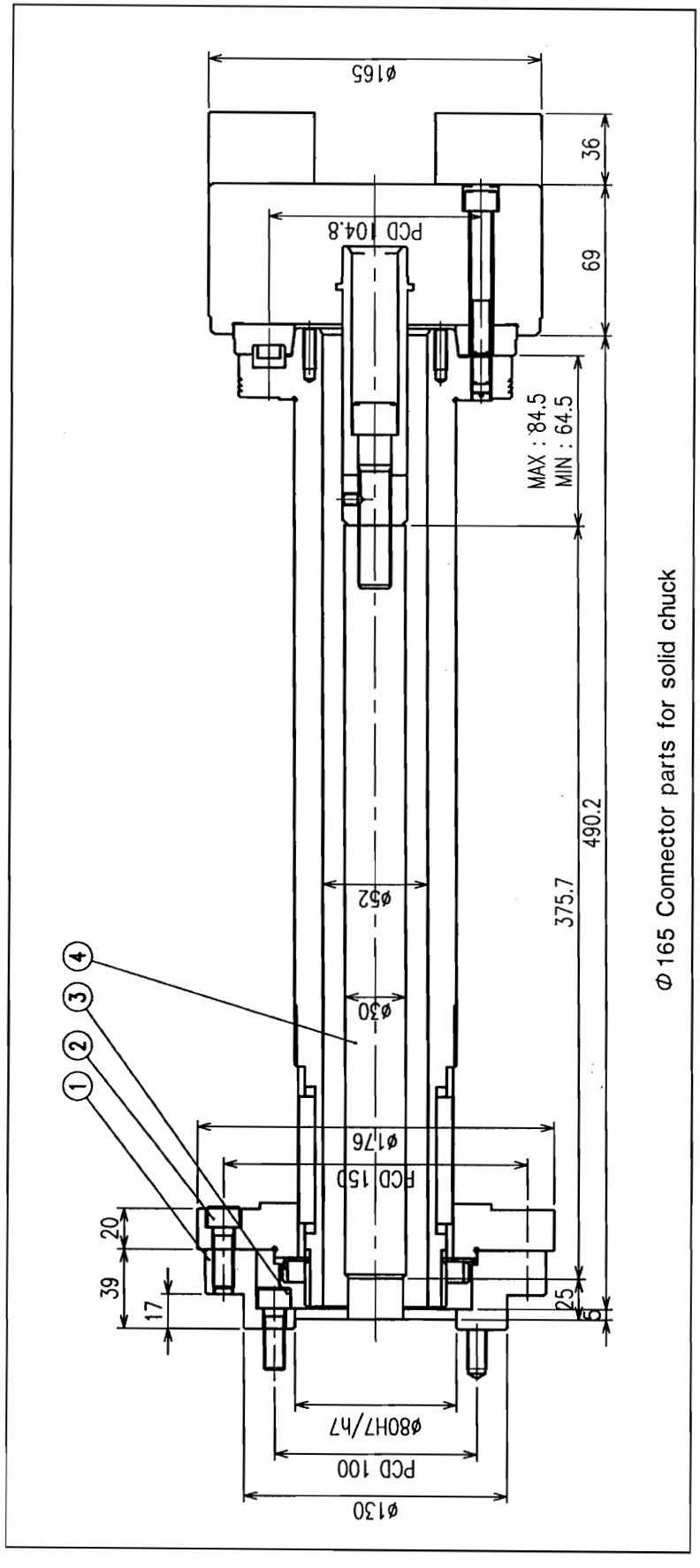

Φ 165 Connector parts for solid chuck

Installation

3-1. Installation of machine

Foundation(Fig 3.1 and 3.2)

The foundation on which the machining tool is installed must be stable to ensure the best cutting performance. Since the base lock or filled-in ground may be available as such a foundation, no fundamental rule will be applicable in this regard.

Following are the noteworthy points when you install this machine.

1. The strength of sub-soil should exceed 3 tons/m^2, and the sub-soil should thicker than 300mm.
2. the range of foundation should be longer than 300mm around the bed.
3. Holes to absorb any shocks should be prepared just outside around the foundation
4. Please note that any large-sized concrete blocks separately laid under the legs of machine as a foundation are no use for that purpose.

   Before selecting the location of machine, you should make arrangement for this machine in the manner that worker can operate this machine without manipulating other parts in case of the transportation with transporting vehicle or without removing cover as transporting vehicle is often used to remove chips in much quantities.

Installation environment

Pay attention to the room temperature, dust and vibration to ensure the best performance of machine. Any fluctuation of room temperature has not a little influence on the precision of machine. So it is necessary to pay careful attention to the heat transfer which may be caused by direct rays of the sun, heater or ventilation duct.

Severe contamination of air including dust causes the abrasion of wet-sliding parts, and electric and electronic parts. In particular, make it sure to install the electric and electronic controlling parts in a clean place as they are very sensitive to dust and moisture. They must be installed on the place subject to any vibration produced by near by machines.

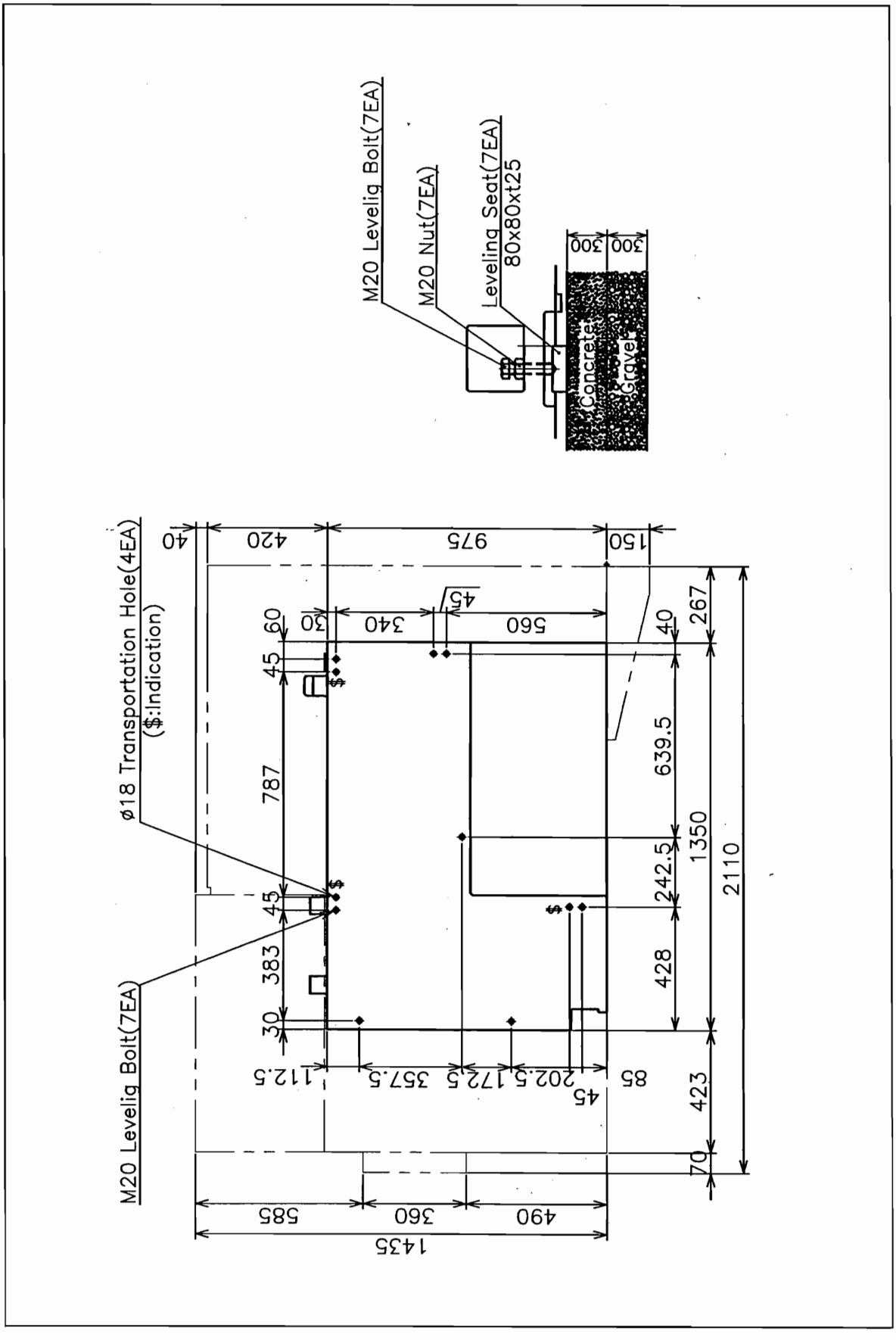
M20 Leveling Bolt(7EA)
M20 Nut(7EA)
Leveling Seat(7EA)
80x80xt25
300
300
Concrete
Gravel
ø18 Transportation Hole(4EA)
($:Indication)
M20 Leveling Bolt(7EA)
40
420
975
150
60
30
340
45
560
40
267
45
787
639.5
45
242.5
1350
2110
30
383
428
112.5
357.5
172.5
202.5
45
85
423
70
585
360
490
1435

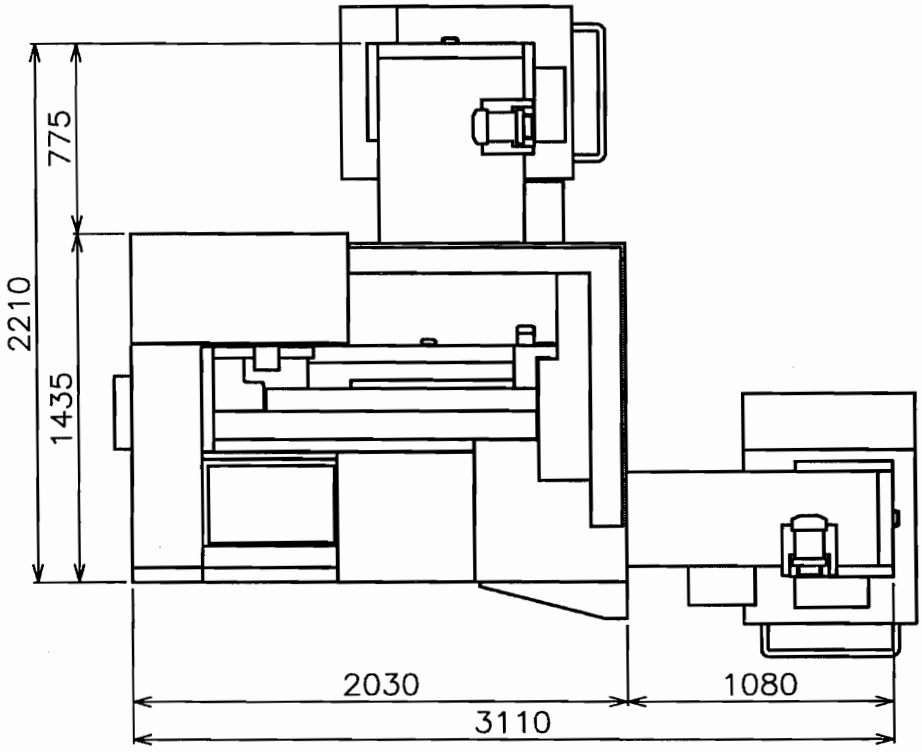
775
2210
1435
2030
1080
3110

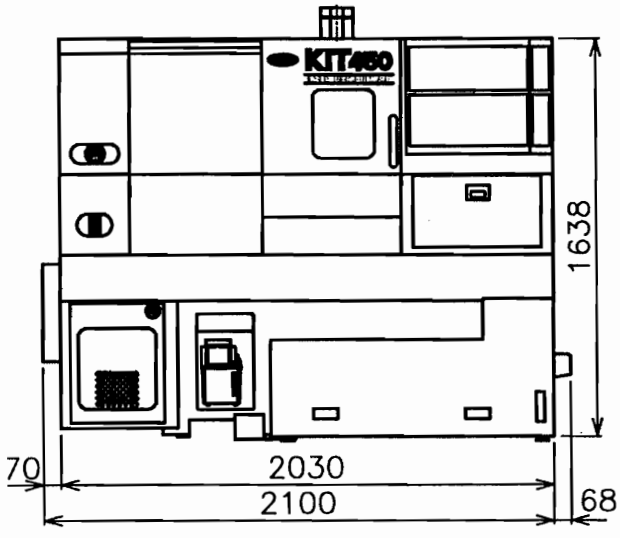
KIT460
1638
70
2030
2100
68

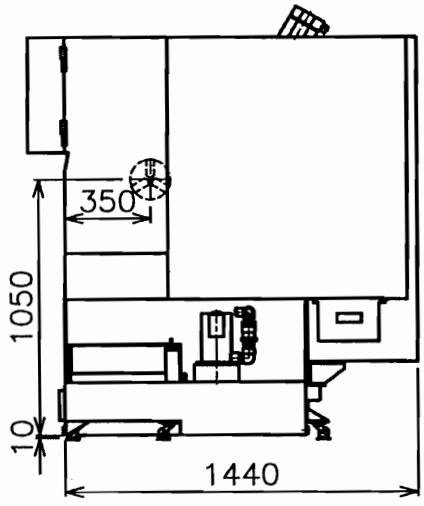
350
1050
10
1440

Lifting work(Fig 3.3)

You must pay careful attention to the lifting work as it is one of the most important works when transporting machine. Lifting work is carried out with crane or chain block, and followings are the noteworthy points concerning the lifting work.

1. Since the weight of machine is 2,700kg or so, use the wire rope whose diameter is linger than 10mm.
2. Take out the coolant tank and remove both the safety cover located between the high-voltage control panel and N/C machine, and the two front door.
3. Prepare the books as shown in Fig 3-3.
4. Adjust the center of load to the center line of lifting angle by moving saddle and cross slide.
5. The lifting angle should be maintained within 90°, and 60° is most suitable.
6. Do not use any corroded or damaged wire rope.
7. When lifting the machine, slowly wind up the wire rope. When wire rope is tensioned tightly. confirm the eye bolt is hooked.
   Lift the machine little up, and reconfirm that the eye bolt is hooked firmly when the machine is lifted a little from the ground.
   Then wind up the rope to lift the machine to the specified height.
   When laying down the machine, gradually lower it. Stop lowering the machine just before it reaches the ground,and confirm location.
   After this, lay the machine on the ground.

Forklift Work(Fig 3.4)

As for forklift work, pay attention to the following points

1. Use the forklift of sufficient capability by taking the weight of machine into account.
2. Operator should work in cooperation of a supervisor to protect each protruding parts of machine from any damage.
3. Use the fork-hooking cast parts located on the right and left sides of machine body frame when hooking the fork.

4. Before lifting work, make it sure to carry out a preliminary lifting so that lifting work is performed in the most stable horizontally and vertically.

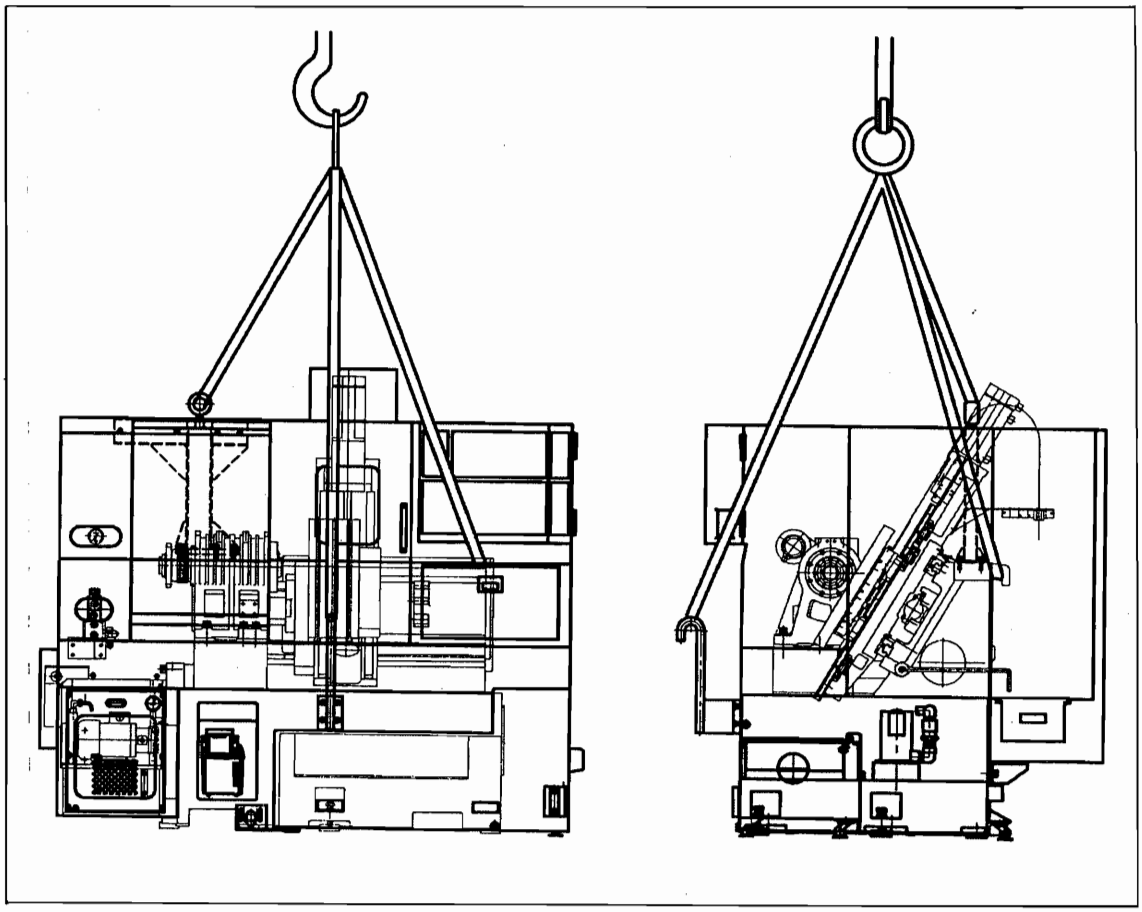

Fig 3.3 Lifting work

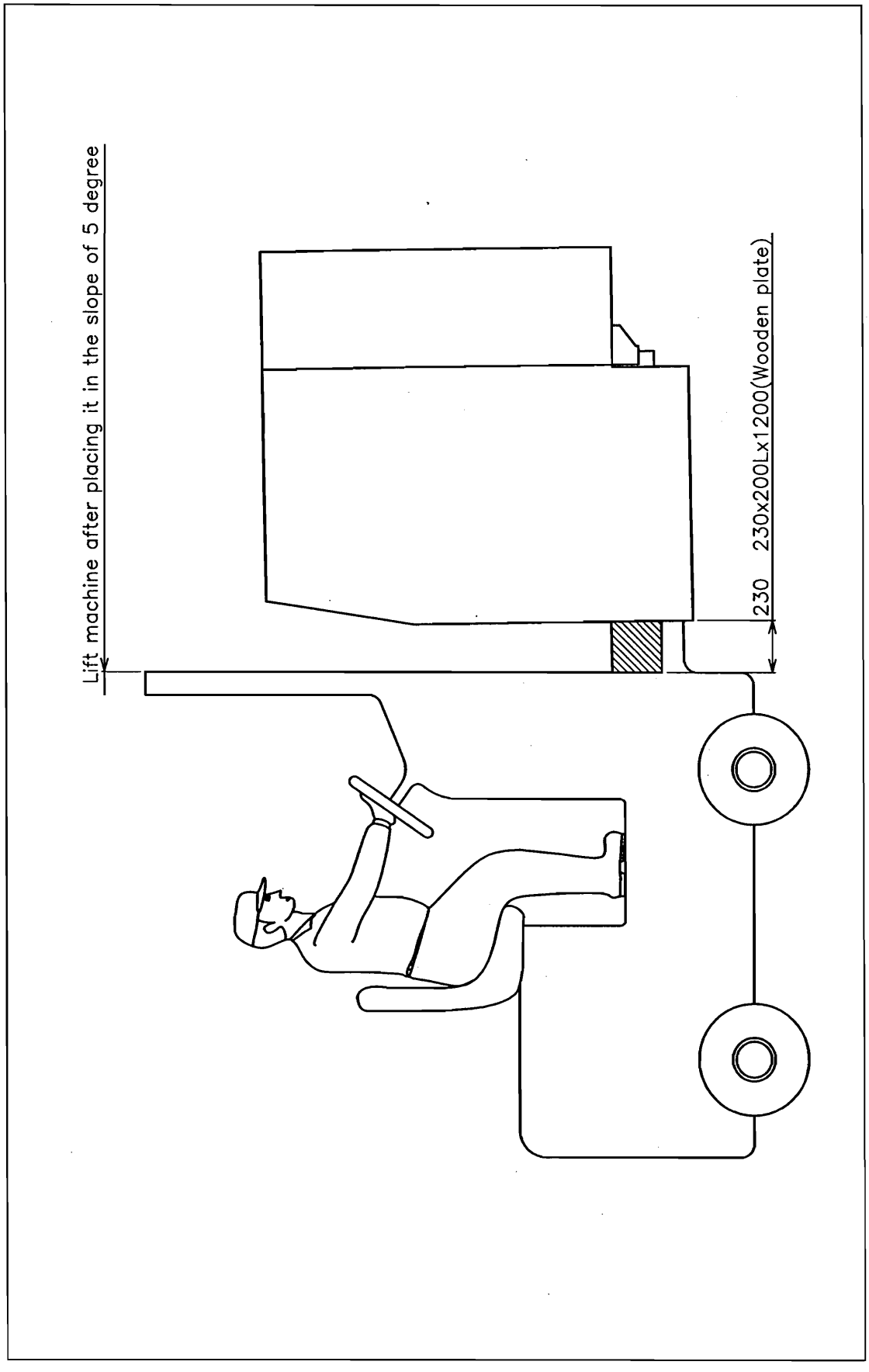

Fig 3.4 Forklift work

Cleaning work

Since anticorrosive paint may be mixed with oil or dust during transportation, fix the saddle and cross slide firmly before cleaning machine.

Each part of this machine is tightened before shipment. So carry out cleaning work after loosening them. Carefully wipe off the anticorrosive paint with cloth wetted with kerosene(neutral) of good quality. Do not use compressive air to clean the machine since foreign substances near the clearance of each part may enter the clearance and inflict damage to the part.

After cleaning machine, slightly apply one of the lubricants described in table 3-1 onto the finished surface.

Power supply and wiring

1) Power switch

Operator is responsible for installing of power switch at the easily accessible place.

2) Wiring from power switch to machine

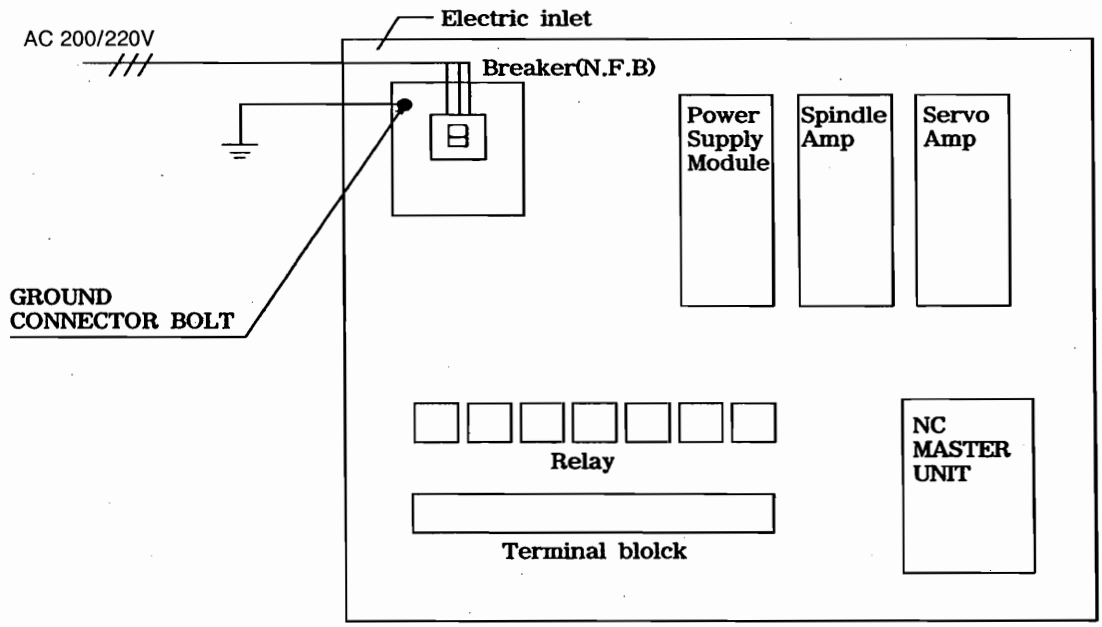

Fig 3.5 High-voltage control panel

When installing machine, carry out wiring work from the power switch to the primary side of breaker(NFB 1) in the high-voltage control panel.

The sectional areas of power cable and earth cable should wider than 14㎟ and 5.5㎟, respectively, The earth cable must be connected to the ground bolt.

Adjustment of electric parts by power voltage and frequency

The electric parts should be adjusted, depending on the power voltage and frequency.

Before adjusting any of them, make it sure to confirm the voltage and frequency.

- Power voltage : 200/220V±10%
- Power frequency : 50/60Hz±1Hz

1) Replacement of power trans. tap controlling high voltage.

After confirming the power voltage, connect the line No. R2 and T2 to the specified tap on the input side.

Supplied voltage	Line No. R2	Line No. T2
191V~210V	Tap screw 200V	Tap screw 0
211V~240V	Tap screw 220V	Tap screw 0

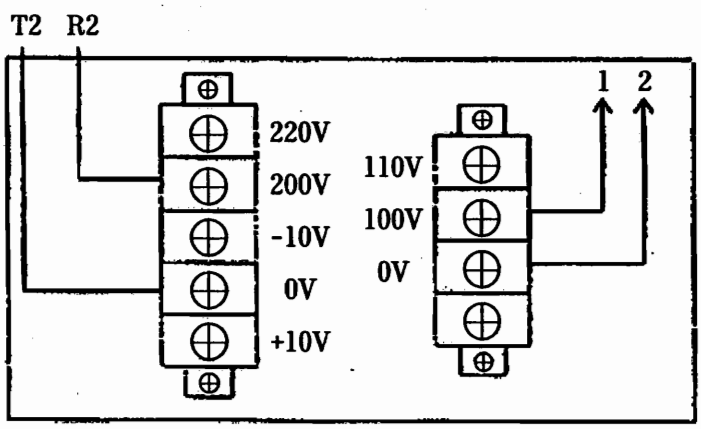

Fig 3.6 Power trans. tap arrangement

Installation and handling of level (Fig 3.7)

Leveling is one of the factors deciding the accuracy of machine, and the most fundamental work having not a little influence on the accuracy of finish workpiece and the life span of machine. Taking these facts into account, carry out the leveling work in accordance with the following procedures.

Place the leveling seat on the floor and install machine in the manner that it comes to the position of leveling bolt of machine. Then place the level on the table as shown in the figure 3-7, move Z to its full stroke(250mm)(Use care to avoid the interference with chuck) and adjust the level in the manner that the difference among level readings does not exceed 0.04mm/m. The level has such a sensitivity as equivalent to 0.02mm/m, and should be used in the same direction. Make it sure to keep the level and contaction surface clean to prevent any dust from penetrating into the clearance between the level and contacting surface. Tighten the leveling bolt lock to prevent the leveling bolt from turning. Do not use motor to fix machine. If any vibration occurs due to and workpieces improperly placed on the machine, tight the base bolt to fix machine. If any vibration occurs due to any workpieces improperly placed on the machine tight the base bolt to fix machine.

After initially installing machine, check the level every two or three days. Then check the level every month for six months after installation, and check the level every three months there after.

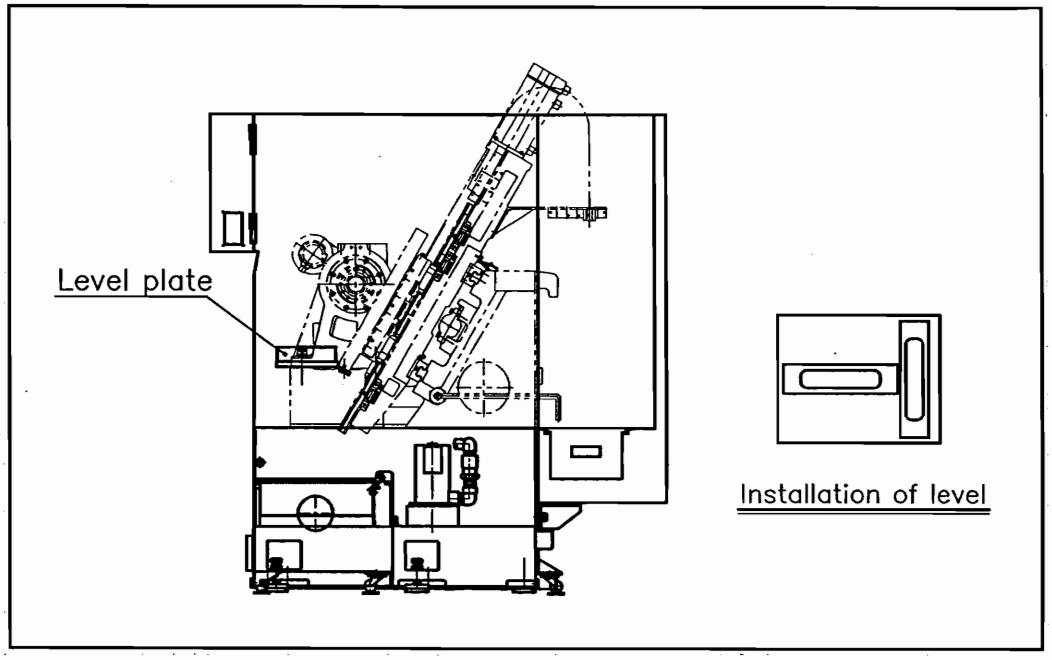

Fig 3.7 Leveling method

3-2. Lubrication and oiling

Before operating the machine, feed oil to the point shown in the Fig 3.8 in accordance with the specified procedure.

We recommend such lubricants as described in the lubricant oiling table.

Hydraulic oil

Make it sure to pour hydraulic oil in 5.5 liters into the lubricant tank up to the level slightly higher than the reference level of oil gauge. It is desirous that the oil level coincides with the reference level of oil gauge after the circuit is filled up with oil. There after, oiling should be carried out at the specified intervals.

Lubrication of wet-sliding surface on X and Z axis

Feed oil in some 2 liters into the lubricating unit tank at the right side of bed.

When oil is reduced below the specified level in the tank, red lamps up on the control panel. Then feed oil into the tank.

Lubrication of hydraulic chuck

Pour oil into it up to full level every day while repeating to open and close the chuck with attached grease gun.

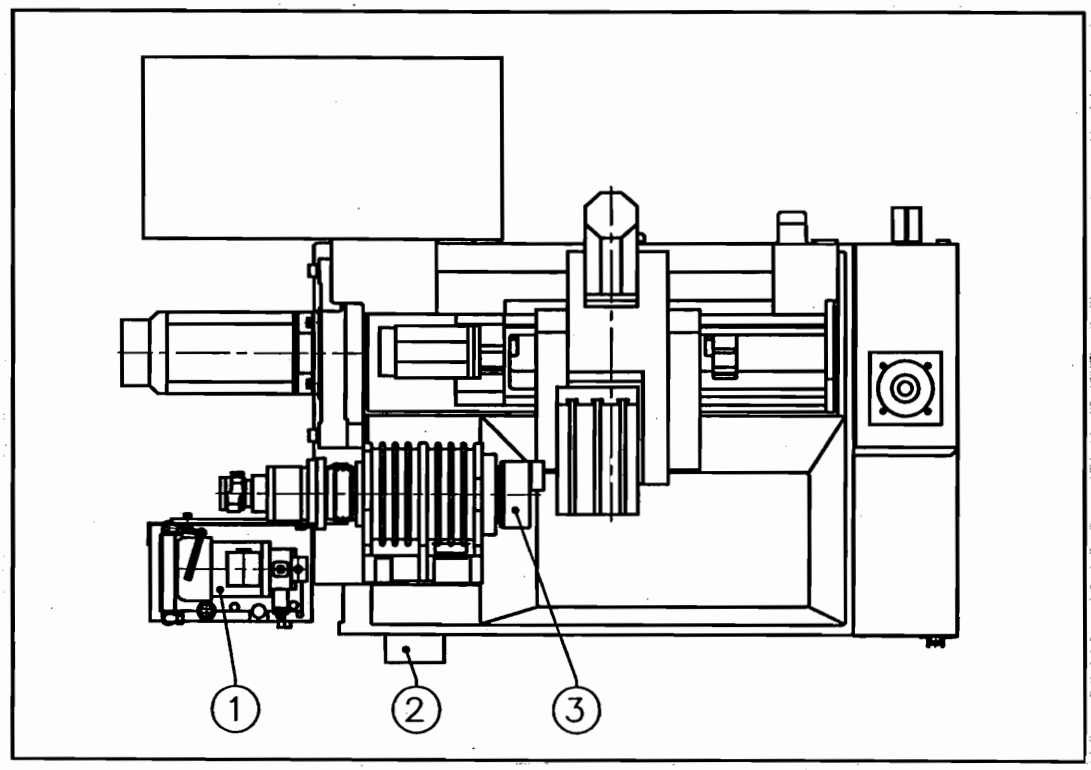

Fig 3.8 Lubricant oiling drawing

Table 3-1. Lubricant oiling table(Fig 3.8)

	Lubrication point	Lubrication method	Quantity and Interval	Lubricant
1	Hydraulic tank		Pour oil in 15 liters gauge level every two	ISO standard CB32 or H1#@ • Japan petroleum FBK oil RO 32 Diamond Lub. RO32 • Shell petroleum Shell Tellus oil C32 • Esso petroleum Teresso 32 • Mobil petroleum Mobil DTE oil light
2	Wet sliding surface	Forced injection	Pour oil in 2 liters. If oil is reduced below the specified level, red lamp lights up. This means that you should feed oil.	ISO standard G68 • Japan petroleum New way 68 Diamond slide way 68 • Shell petroleum Shell toner oil petroleum T68 • Esso petroleum Feibs K68 • Mobil petroleum Mobil Vactor a oil No.2
3	oil chuck	injection	Fill up the tank more than once each day	Grease • Dow corning Molykote (R) BR2-S Grease

3-3. Cutting oil

Cutting oil is largely divided into soluble and insoluble cutting oils.

All kinds of cutting oils are not introduced here as there are too many kinds of them. Attention should be paid to the following points when cutting oil is used for this machine.

1. Inject cutting oil in fifty liters or so into coolant box located in front of the bed.

2. Use spare water when installing machine, when performing test operation or when machine has not been used for a long time.

3. Noteworthy points when using soluble cutting oil
   1) Soluble cutting oil having good lubricability, permeability, anti-forming property, separability from oil and stability should be used.
   2) Before and after operation eliminate chips from machine, and wipe out soluble cutting oil from each wet sliding surface of machine, slide rest, swiveling part and cross sliding part. Then make it sure to apply lubricant thinly.
   3) Any deterioration, eliminated chips from machine, and wipe out soluble cutting oil from each wet sliding surface of machine, slide rest, swiveling part and cross sliding part. Then make it sure to apply lubricant thinly.
   4) Remove the cover, and clean the ball screws at X and Z axis in each wet sliding surface and the limit switch as well as the feed motor every three months.
   5) Since soluble cutting oil has anticorrosive property, and parts may be corroded when they are dried. Therefore make it sure to apply anticorrosive oil on to wet sliding surface after operation.
   6) Since soluble cutting oil has an alkalinity, it may cause dermatitis. Therefore workers should observe the well established hygience practice.
   7) Since there are many kinds of diluents and dilution methods for soluble cutting oil. they should be used in accordance with cutting oil manufacturer's instructions.

3-4. Before test operation

The following points should be confirmed step by step before test operation.

1. Confirm the voltage since there are two types of voltage available by area.

   Single-phaes, 100V, 60Hz

   Three-phases, 220V, 60Hz

   Measure each line voltage. The difference between line voltages should not exceed several volt.

2. Turn on the breaker located on the high-voltage control panel, reset "emergency stop" button, and press "NC power" button and "operation ready" button. Then check that "operation ready" lamp lights up.

3. Set the mode selector key to MANUAL(feed, feed axis).

4. Confirm the rotational direction of each motor.

   Rotate each motor using each corresponding switch, and confirm the rotational direction with reference to the specified mark.

   If motor rotates in the reverse in the reverse direction, exchange two wires with each other among three wires.

   (1) Cooling water motor starts then stops, using the break on the high-voltage control panel.

   (2) Lubricant motor enters into "operation ready" state, and stops when setting "power" button to OFF.

   (3) Hydraulic motor enters into "operation ready" state, and stops when setting "power" button to OFF.

   (4) Spindle motor rotates intermittently.

   (5) Cutting oil motor stops operation with coolant key.

5. Set the oil pressure of hydraulic equipment to 35kg/㎠

Maintenance

4-1. Regular check list

Caution : Make it sure to check and clean the machine before and after work, and check the following parts on regular basis.

Checking and cleaning point	How to check and clean	Interval
Rotation of cooling fan		
Rotation of cooling fan	Check 2 points inside the control	Daily
Air filter	Remove control panel door and clean it with	Monthly
Terminal board and	compressor	
relay	In screw loosened?	Semiannually
NC device		
Rotation of cooling fan	Inner part of two doors of NC device	Daily
Tape guide	Clean with gauze wetted with absolute alcohol	Daily
Reading head sur face	Clean with gauze wetted with absolute alcohol	Daily
Tape box·bottom part	Clean with cloth, brush or cleaning machine.	Weekly
Magnet part for pressing	Clean with adhesive tape if powdered iron	Weekly
tape	is attached to magnet	
Tape passage	Celan with gauze wetted absolute alcoho	Weekly
Each indicator lamp	Check by operation each part	Monthly
Lubrication and hydraulic		
tank	Supply 2 liters of oil whenever	Daily
Lubrication tank	lubrication alarm(AL-3) is indicated	
	Check prior to work (change every six	Weekly
Hydraulic tank flowrate	months), 10 liters	
Hydraulic pressure gauge	Check prior to work	Weekly
Pipe joint part	Check for any leak, clean the joint	Semiannually
Machine frame		
Tool stand index state	Indexing and swivel check	Semiannually
X-, Z-axis one pulse	10/1 X-axis 5μ Z-axis 10μ	Semiannually
feed	Measure using dial indicator	

Checking and cleaning point	How to check and clean	Interval
X-axis reference point	Repeat zero return several times to check the Positon	Daily
Z-axis reference point	Repeat zero return several times to check the positon	Daily
Each limit s/w	Check by operating each part	Monthly
Each pressing button change s/w	Check by operating each part	Monthly
Each indicator lamp	Check by operating each part	Monthly
Cutting oil recycle hole	Clean the cutting oil recycle hole chip behind the chuck cylinder	Daily
Chuck	Fill up the chuck with grease	Daily
Slide cover	Clean the chip when work is over	Daily

4-2. Safety operation

1. Emergency stop

When pressing EMERGENCY STOP button on the control panel, machine quickly stops operation in case of emergency.

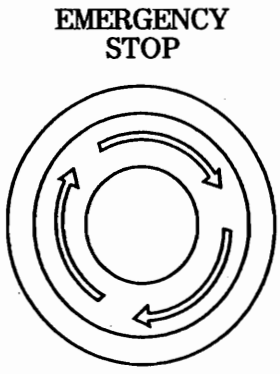

When pressed, EMERGENCY STOP button is locked. When turned counter clock wise, it is release.

(Note) 1. Motor power is disconnected by emergency stop.

2. Before releasing emergency stop. eliminate the cause of trouble.

2. Over travel

If tool moves beyond the stroke end set by limit switch or beyond the stored stroke end set with parameter, alarm apperas, and tool decelerates and stops.

In this case, move tool manually to the safe area and press reset button to release alarm.

Example) Release of over travel along the +X direction

① After selecting JOG mode, press axis selector switch "-X" button

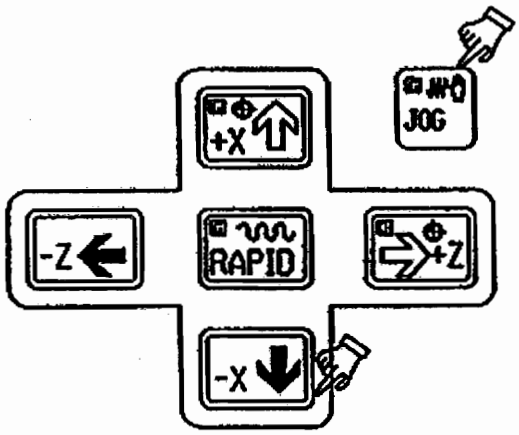

② Press POS key on CRT/MDI panel to select position screen.

```
ACTUAL POSITION                          O0020  N00020
(RELATIVE)                    (ABSOLATE COORDINATE)
 U  246.912                     X  123.456
 W  913.760                     Y  456.690
(MACHINE)
  X  0.000
  Y  0.000
                    MACHING PARTS NO.
JOG F   2000
RUN TIME  OH15M   CYCLE TIME    OH OM38S
ACT.F3000MM/MIN      OS 100%     L  0%
MEMSTRT MTN---       09 : 06 : 35

[ ABS ]    [ REL ]   [ ALL]  [      ]  [ (OPRT) ]
```

③ Confirm that X axis increases in "-" unit.

④ Some one to two seconds are required for the above-said operation.

4-3. X and Z axis backlash adjusting method

1) Delete the compensation entered.

a. Select the setting screen and make the parameter change valid.

b. Select the parameter screen and delete the backlash compensation.

2) Measuring Backlash

a. Fit the dial indicator to the turret from tail stock side.

b. Measure the backlash using X- or Z-axis handle (See the following Fig.)

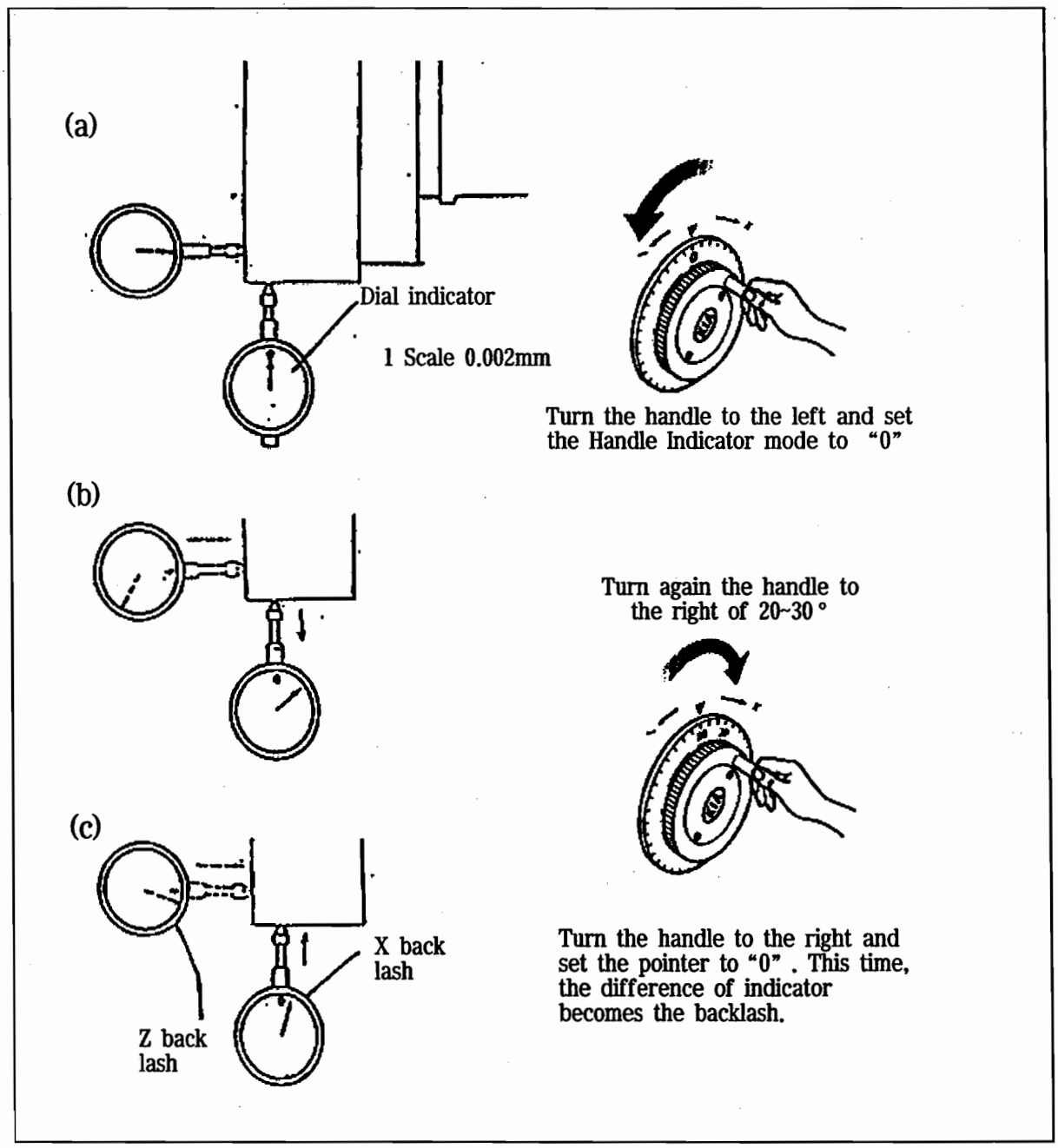

3) Setting Sequence of Backlash

a. Display the parameter screen as in above 1).

b. Confirm the cursor is positioned at no. of the axis to be compensated, key in the compensated value and then press [INSERT] key.

Ex. 1) X-axis backlash compensation

If 0.012 of backlash is compensated,

$$\text{Compensation} = \frac{\text{Backlash Value}}{\text{Compensated unit (0.0005)}} = \frac{0.012}{0.0005} = 24\text{mm}$$

Ex. 2) Z-axis backlash compensation

If 0.015 of backlash is compensated,

$$\text{Compensation} = \frac{\text{Backlash Value}}{\text{Compensated unit (0.001)}} = \frac{0.015}{0.001} = 15\text{mm}$$

In the above method, input the specific backlash value.

c. Turn OFF and then re-apply the power.

⚠ CAUTION
If para, c being not performed, it is impossible to operate properly.

4) Checking Backlash

Check the setting value is proper in the method of 2).

4-4. Discharge of Lubricating oil

1) Discharging period

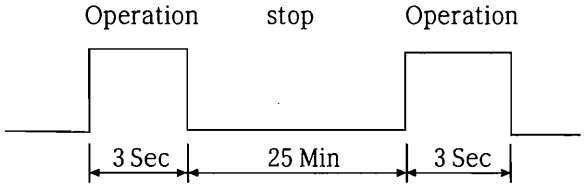

Flow : 100cc/min(0.02gal/min)
Pressure : 8 kgf/cm² (0.8Mpa)

a. Discharging time is set to 1 seconds.

(T48=3000)

b. Discharging period is set to once a 25min

(T00=1500000)

2) Adjustment of discharging period

To set the stop time to 40 min, perform as foolows :

※ Max. setting time is about 26 min

➡ [PMC] ➡ [PMCPRM]

Press "SYSTEM" key and select the parameter screen

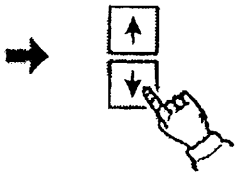

PMC PRM MONIT RUN

NO.	ADDRESS	DATA	NO.	ADDRESS	DATA
01	T00	1500000	10	T20	:
02	T02	:	11	T22	:
03	T04	:	12	T24	:
04	T08	:	13	T26	:
05	T10	:	14	T28	:
06	T12	:	15	T30	:
:	:	:	:	:	:

[TIMER] [COUNTER] [KEEPRL] [DATA] [SETTING]

➡ 2# 4(0. 0. 0. 0. 0. INPUT , the setting time is changed to 40 minutes.

4-5. Hydraulic system

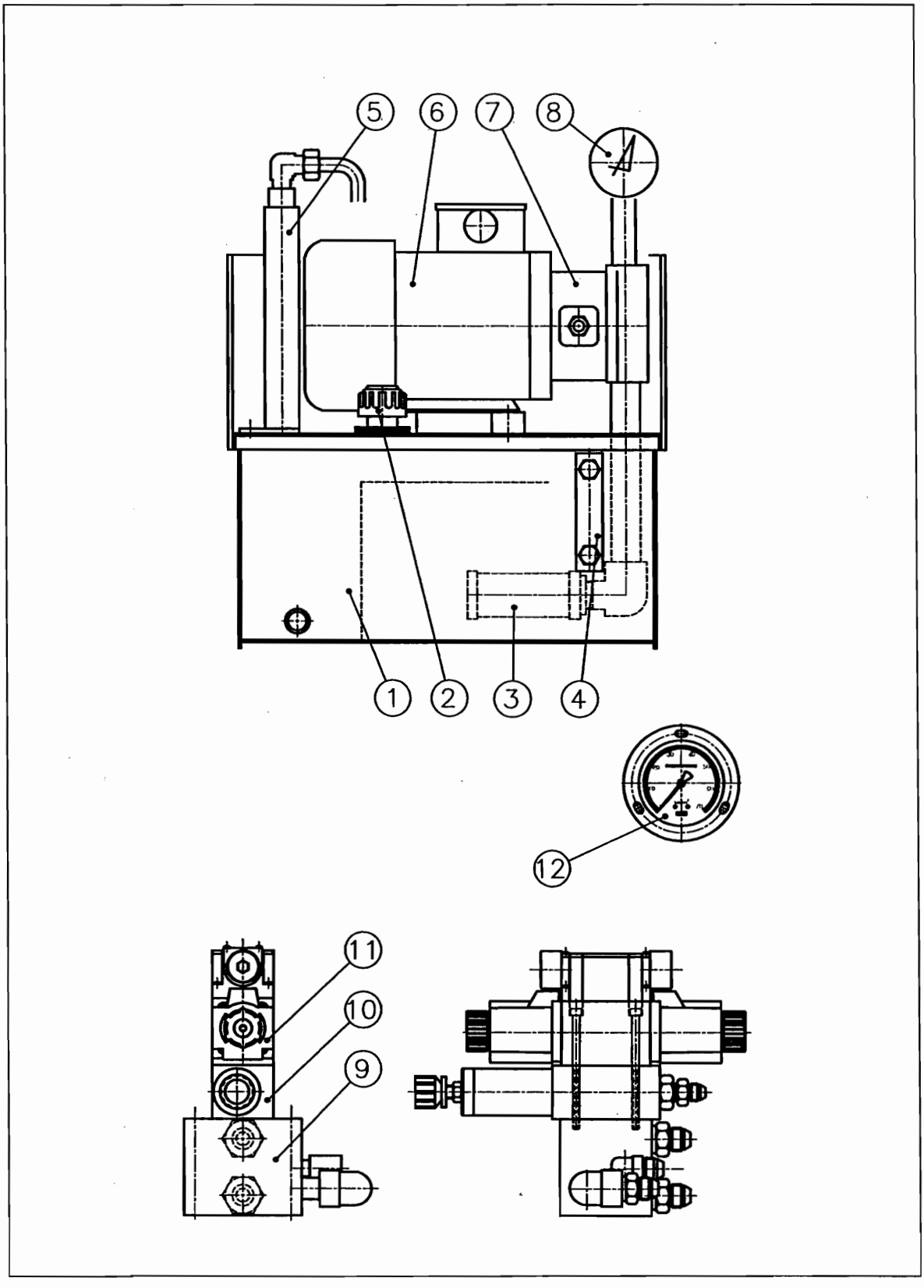

HYDRAULIC PARTS

No.	Name	EA	Type	Remark
1	Oiling hole	1	AB-1162	NORTHMAN
2	Oil tank	1	10 liter	NORTHMAN
3	Strainer	1	MF-06	NORTHMAN
4	Oil gauge	1	LS 3″	NORTHMAN
5	Hyd. pump	1	VPVC-F12-A2-A2-02	NORTHMAN
6	Pressure gauge	1	2-1/2″*70Kgf/㎠	NORTHMAN
7	Pressure gauge	1	PM4906433727	
8	Solenoid valve	1	PH013204745N	NACHI
9	Reducing valve	1	PH13004745N	NACHI
10	Manifold	1	PH011304702N	NACHI

Pressure adjustment

Record pressure adjustment method for each unit.

1. Hydraulic chuck pressure adjustment

   a. This will be explained in the clause "chuck installation and removal". (Refer to clause 5~6)

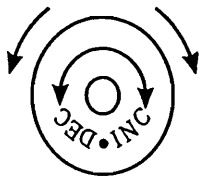

Pressure Drop Pressure Rise

Hydraulic circuit

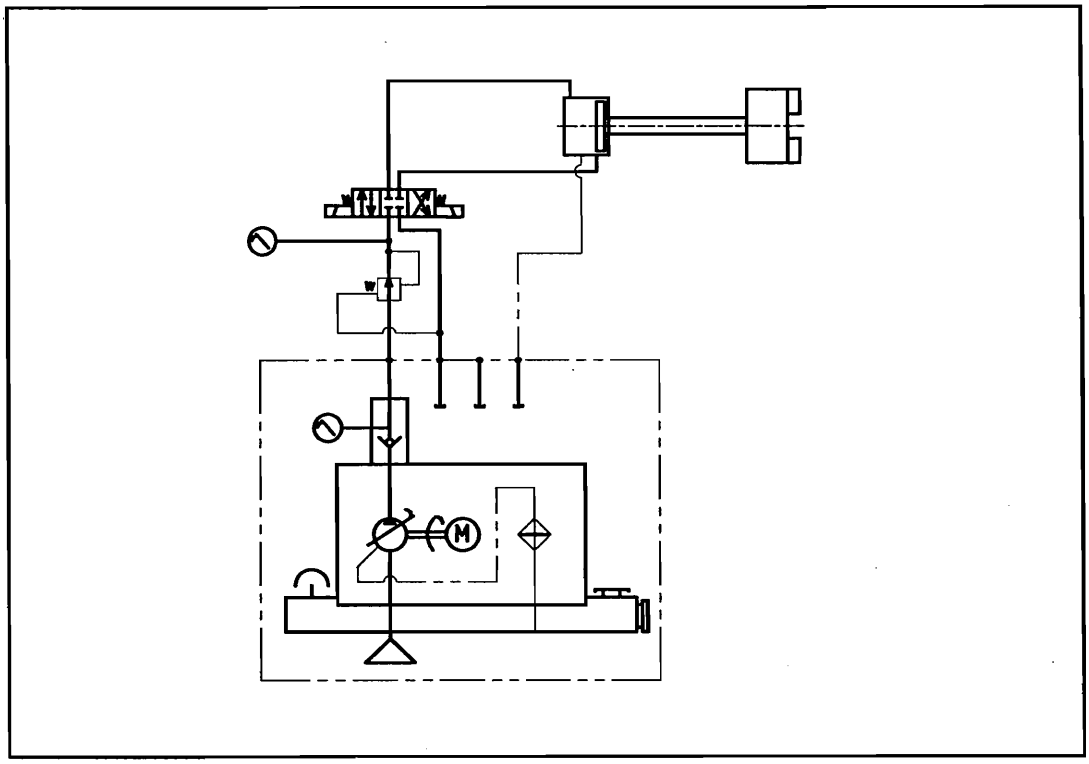

4-6. Hydraulic chuck

This equipment opens and closes chuck using oil pressure as power source. The equipment saves the time required to mount and dismount workpiece and worker's effort as well as to obtain strong and stable power. This equipment opens and closes chuck with foot switch so that worker can use both hands to mount and dismount workpiece to improve the workability.

foot switch

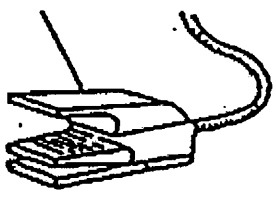

Hydraulic chuck diameter : ø165(6″)

Hydraulic tank unit : simultaneously used for machine frame.

Operation

1. Select the chuck tightening direction with the grip direction exchange switch on the main control panel.
2. When treading on the foot switch in front of bed, jaw moves to grip workpiece.

   When treading on the foot switch once more, jaw moves to release workpiece.
3. Chuck pressure adjustment
   - When turning handle clockwise(INC direction), pressure rises.
   - When turning handle count-clockwise (DEC direction), pressure drops.
   - Chuck pressure changes within the range of guage pressure.

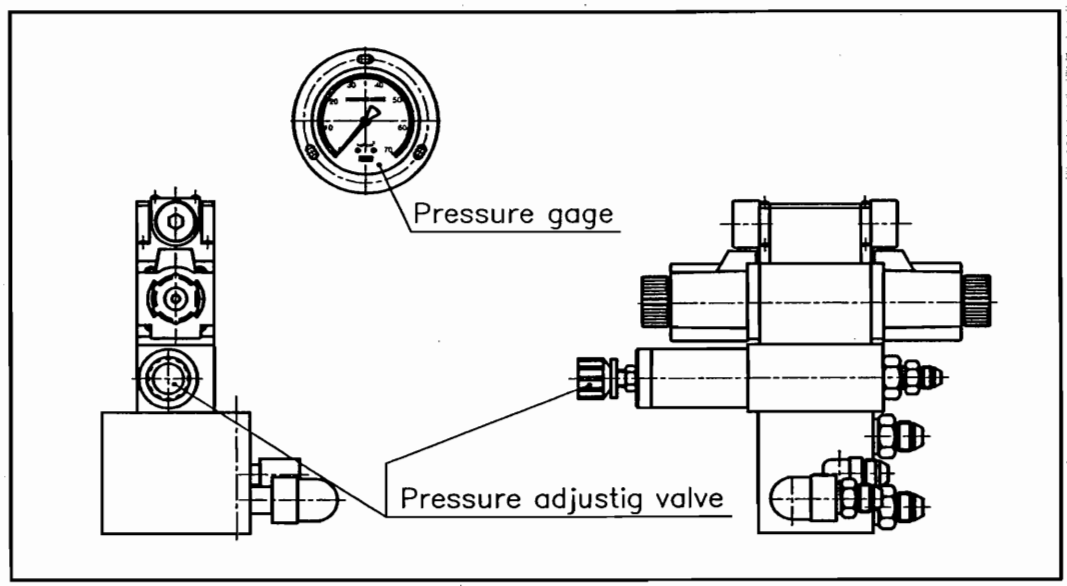

1. Interlock function is provided to prevent chuck from being opened or closed while spindle rotates.
2. When treading on the foot switch while spindle rotates, it is immediately loosened. Therefore you should use care not to tread on the foot switch except for mounting or dismounting workpiece, or changing the grip direction.
3. Make it sure to change the grip direction only after dismounting workpiece.

Solid Hydraulic Chuck and Cylinder

Item	Spec.
Hydraulic chuck	CAS-6"
Hydraulic cylinde	ACE YASC-100

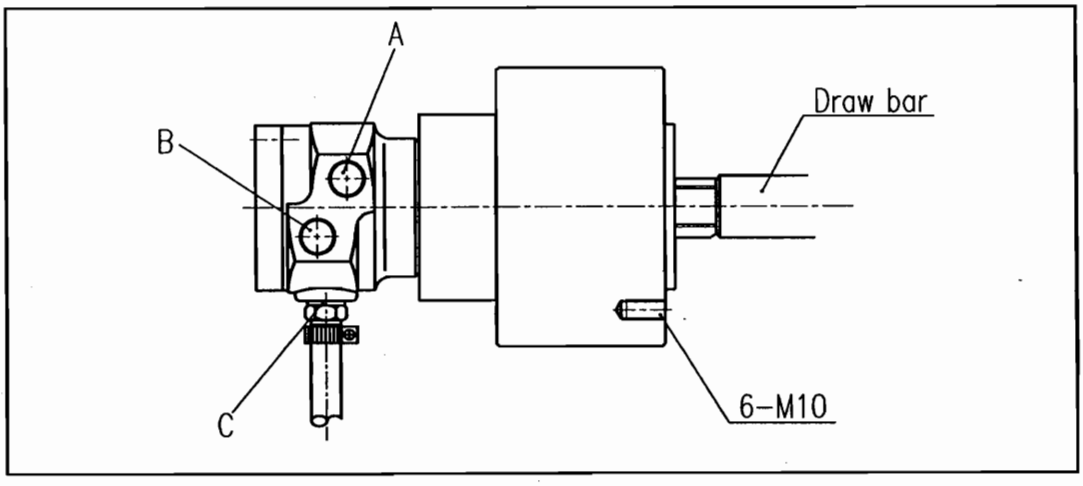

Installation of Hydraulic Cylinder

1. Connect draw bar to hydraulic cylinder
2. Install hydraulic cylinder on the cylinder flange with 6-M10 bolts
3. Carry out hydraulic piping work at point A, B and C

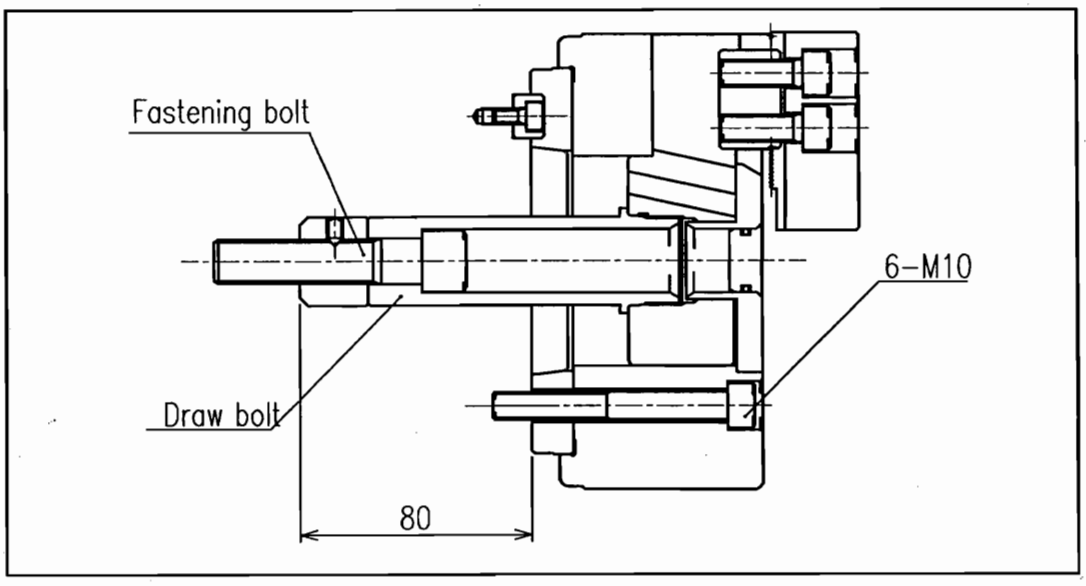

Hydraulic Chuck

1. Turn power on to move draw bar back with hydraulic chuck open/close foot switch. (Set pressure is lower than 5kg/㎠)
2. Screw up the draw bolt 80mm to adjust hydraulic chuck
3. Fasten it to draw bar with fastening bolts, and install chuck with 6-M10 bolts.

Hollow Hydraulic and Cylinder(Option)

MAKER	SAMWOO	SMI
Hydraulic chuck	HAS-06	HH037M6
Hydraulic cylinde	SYH-1239	HHHCA6

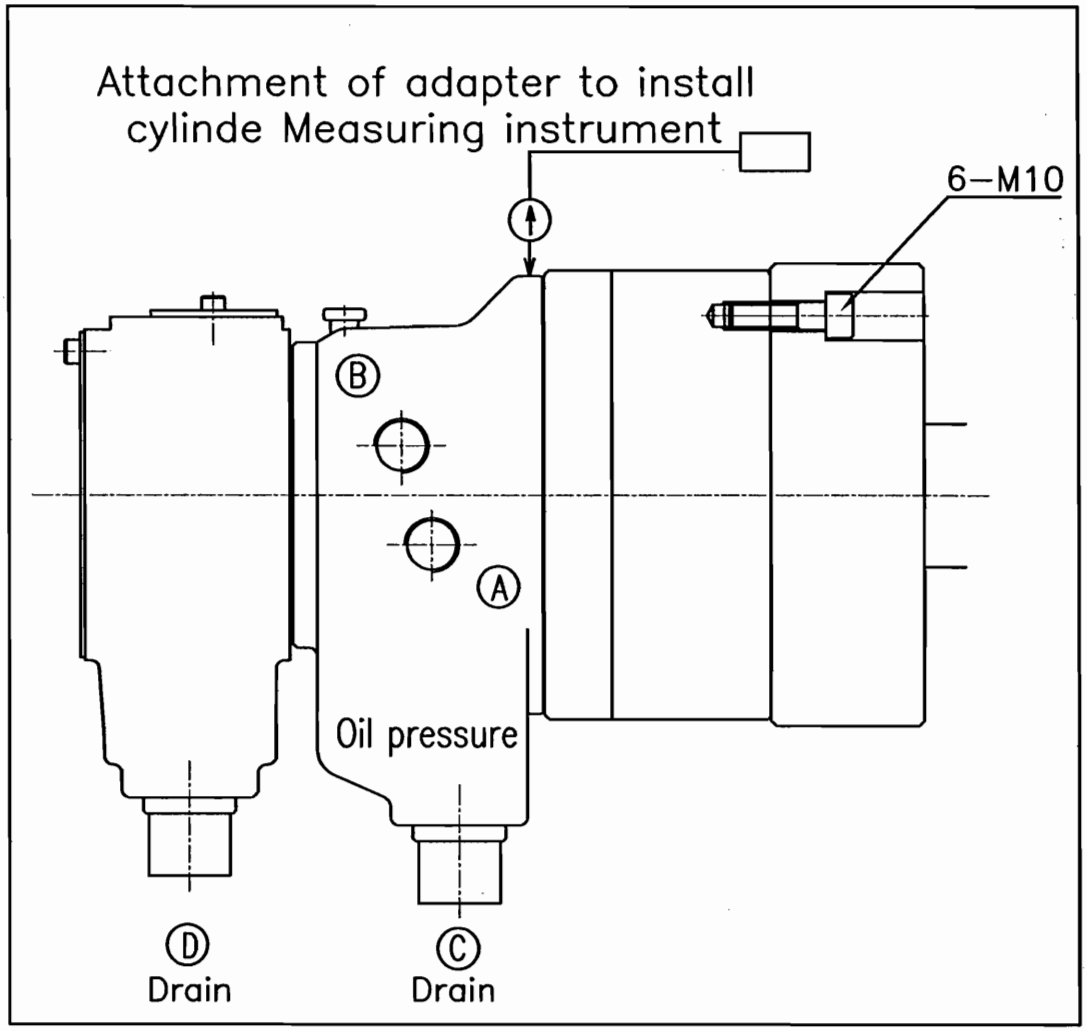

Installation of Hydraulic Cylinder

1. Install hydraulic cylinder on the spindle adapter with M10 bolts.
2. Use a measuring instrument to arrange and fix the rear part of cylinder, and rotate spindle at the speed equivalent to 50 rpm or so to check whether cylinder shakes.

   (Note 1) The part where measuring instrument is placed must be fixed.
3. Fasten cylinder with bolts, using care to ensure that cylinder vibrates within 0.02 range.
4. Carry out hydraulic piping work at point A, B and C.

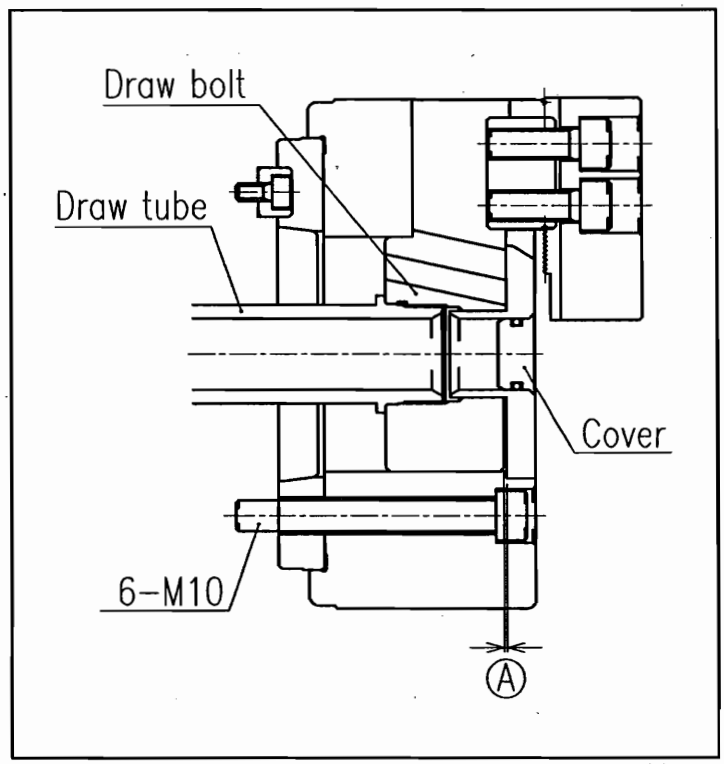

Installation of Hydraulic Chuck

1. Turn power on to advance draw bar with hydraulic chuck open/close foot switch.
   (hydraulic chuck set pressure should be lower than 5kg/㎠)
2. Screw up draw bolt to install hydraulic chuck in the draw tube.
3. Fasten the chuck with six fastening bolts.
4. Adjust draw bolt in the manner that the clearance (A) is maintained 1mm or so while chuck remains open after installing chuck with fastening bolts.
5. Place cover (Three small flush screws (M4×6))

4-7. Electric parts layout

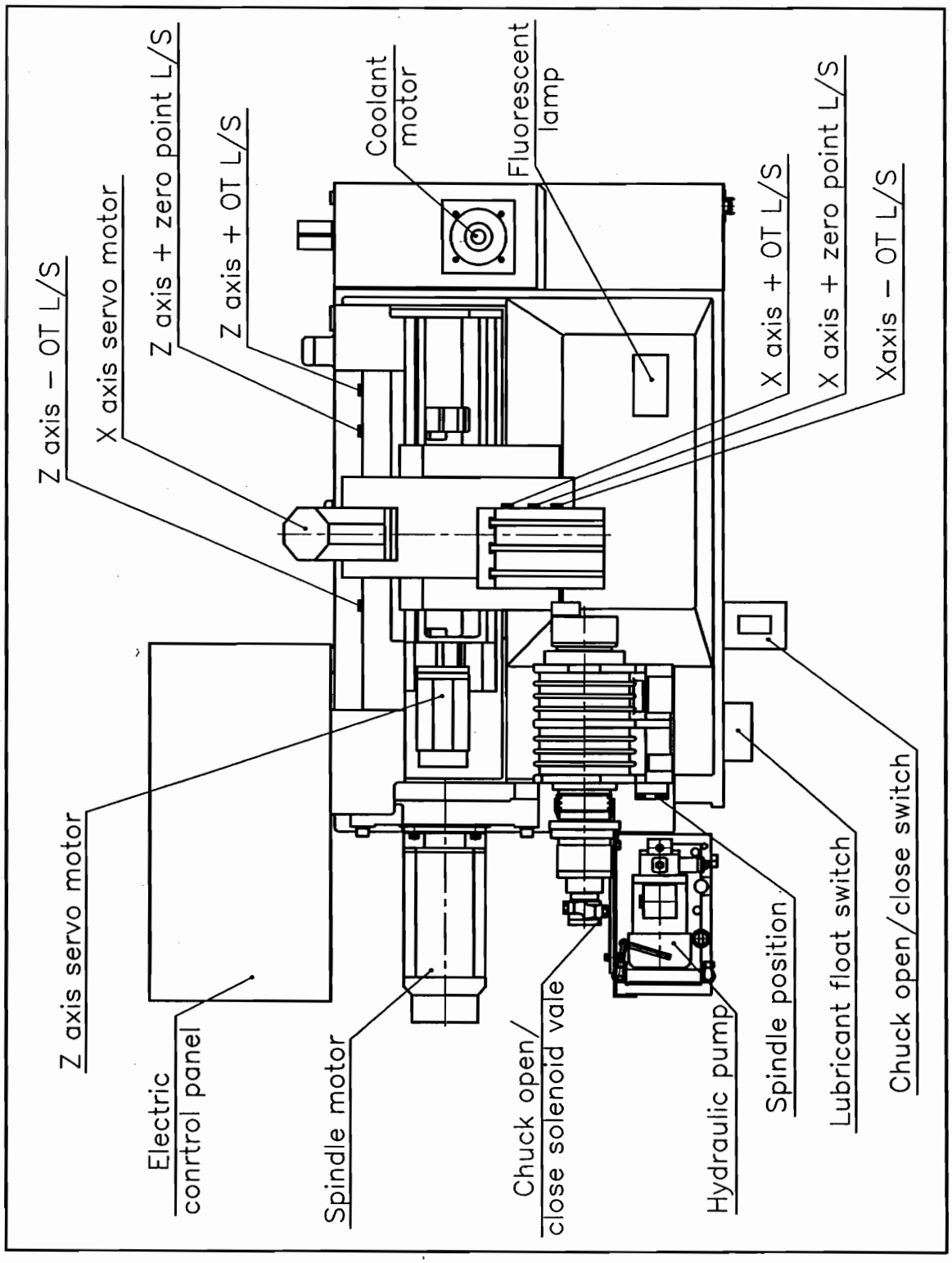

4-8. X and Z axis zero point adjustment

Procedure 1

Zero point confirmation

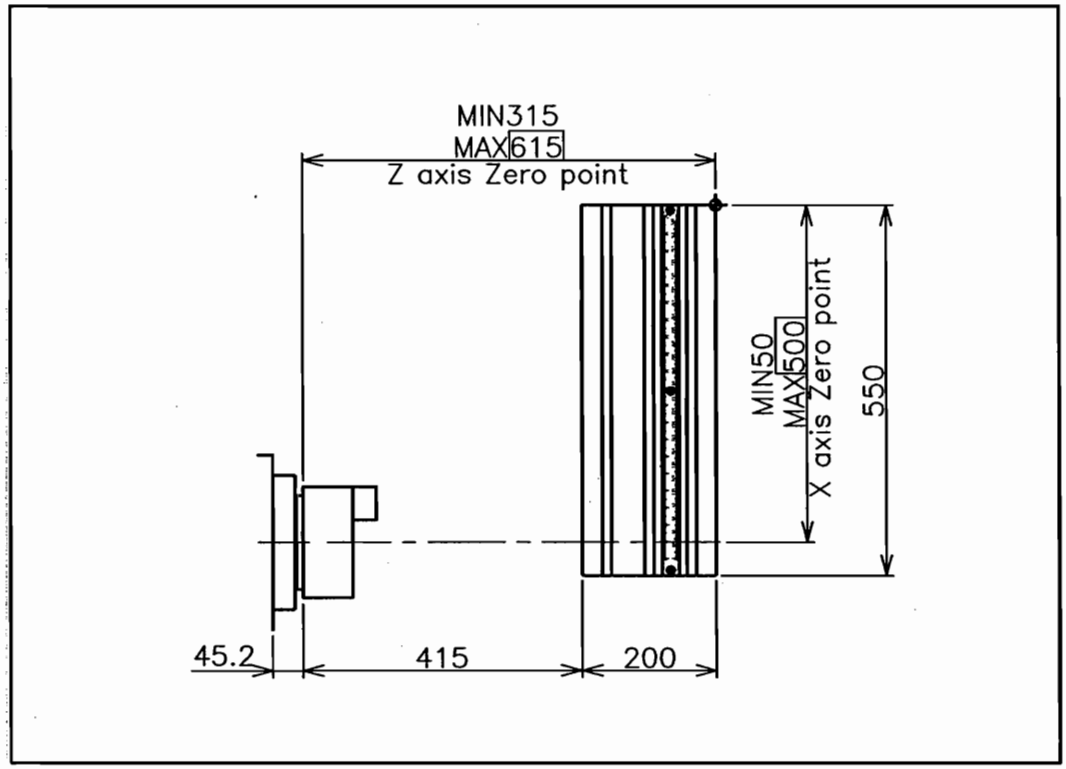

Procedure 2

Before adjusting zero point, cancel the shift previously entered.

1) Set mode selector switch on the manual control panel to MDI.
2) Press function button PARAM to display PARAMETER on the screen.
3) Key in NO with ADDRESS key, and enter X, Z axis 1850 with DATA key.
   Then press INPUT button
   GRID SHIFT previously entered is displayed on the screen.
4) Press ADDRESS key, and press [CAN] with DATA key. Then press [INPUT] button to cancel the shift
5) Turn off NC Power to erase alarm, and turn NC power on again.

Procedure 3

X axis zero point measurement

1) Install block gauge as shown in fig. 5-10
2) Attach magnetic stand type dial test indicator (scale : 1/100) onto the sectional area of chuck.
3) Move cross slide toward (+) direction to place the gauge groove near the indicator. Then adjust it while using care that no shaking occur along the X axis.
4) Set the present point on the X axis to (0)
5) Move cross slide toward +Z direction to detach indicator.
6) Set mode selector switch to ZERO RETURN to return X axis to the zero point
7) The difference between the X axis zero point (450,000) and the current position is the amount which should be adjusted.

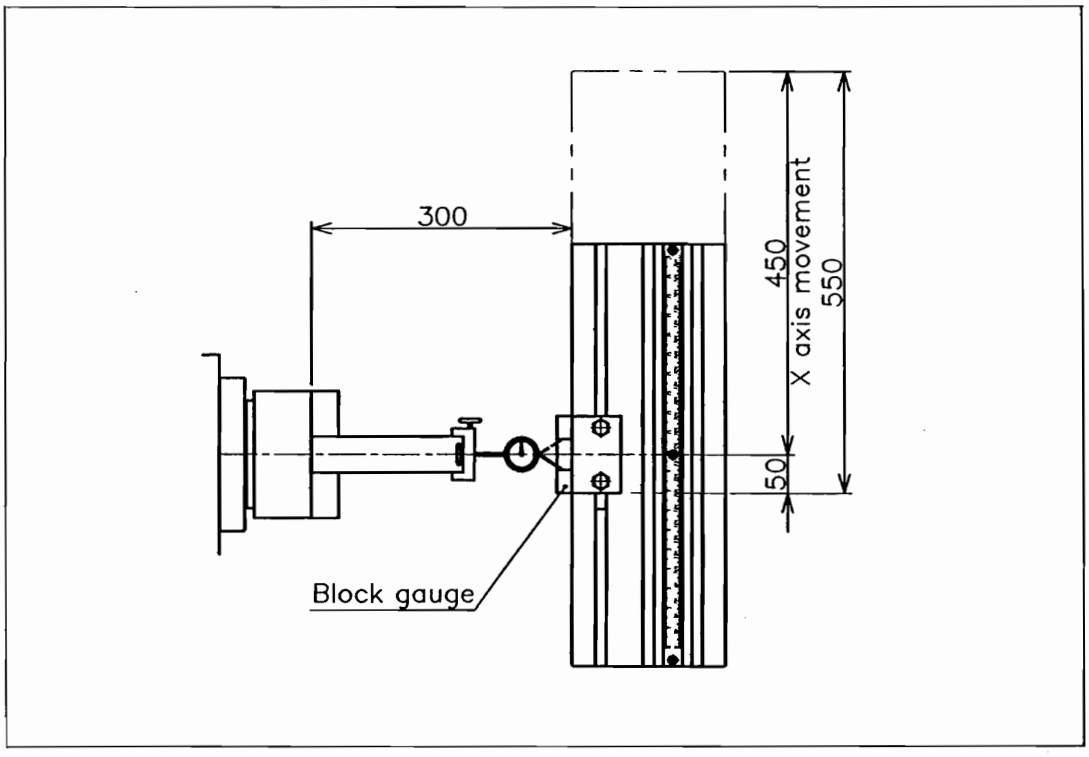

Procedure 4

Z axis zero point measurement

1) Leave the block gauge installed as it is when adjusting X axis, and move cross slide 175 along X-axis
2) After moving cross slide 300 toward -Z direction adjust the clearance between cross slide and soft jaw to 5, using clearance gauge.
3) Set the present point on the Z axis to (0)
4) Set mode selector switch to ZERO RETURN to return Z axis to the zero point.
5) The difference between the Z axis zero point (300,000) and the current position is the amount which should be adjusted.

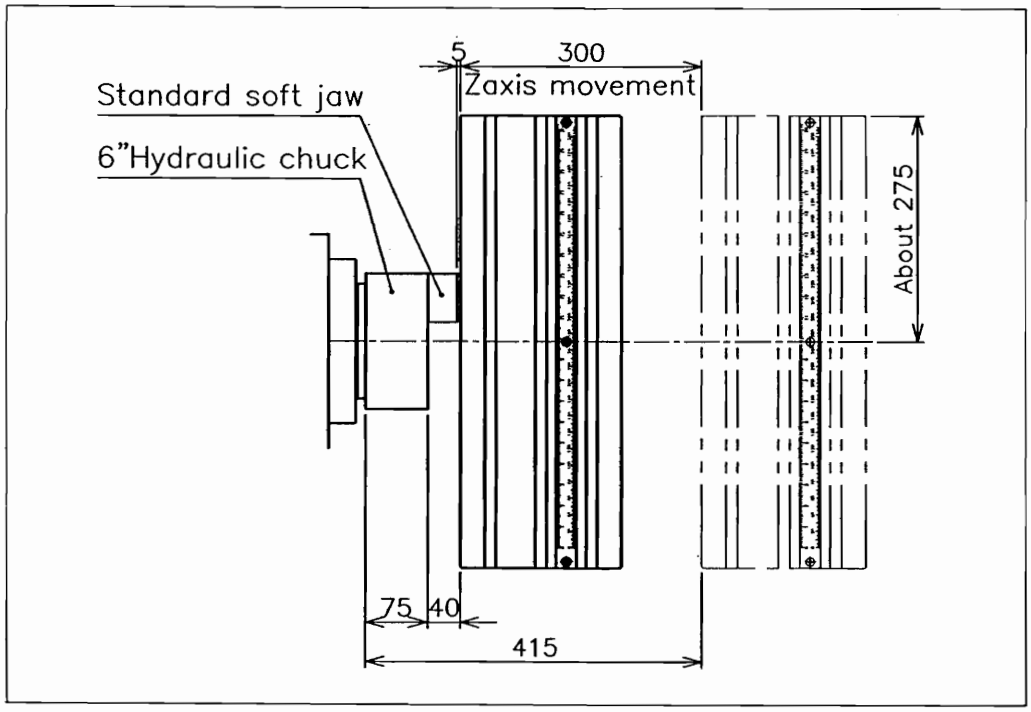

Procedure 5

Zero point shift input

1) Display X axis or Z axis [1][8][5][0] with parameter in accordance with procedure 2.

2) Press ADDRESS key, and enter shift with DATA key.

Then press [INPUT] button.

If counter number is positive with reference to zero point, shift = -[position value]

If counter number is negative with reference to zero point, shift = -[negation value]

One of the above values should be entered.

Example) If it stops at 452.157 in reference to 450,000 on X axis
If it stops at 297,736 in reference to 300,000 on Z axis
X axis shift = 450,000 - 452,157 = -2,157
X axis shift = 300,000 - 297,736 = -2,264

3) Turn off NC power to erase ALARM, and turn on NC power again.

Reconfirm the zero point, and correct error if any.

(Reference)

Zero point dog adjustment

(1) Zero point limit switch location X axis

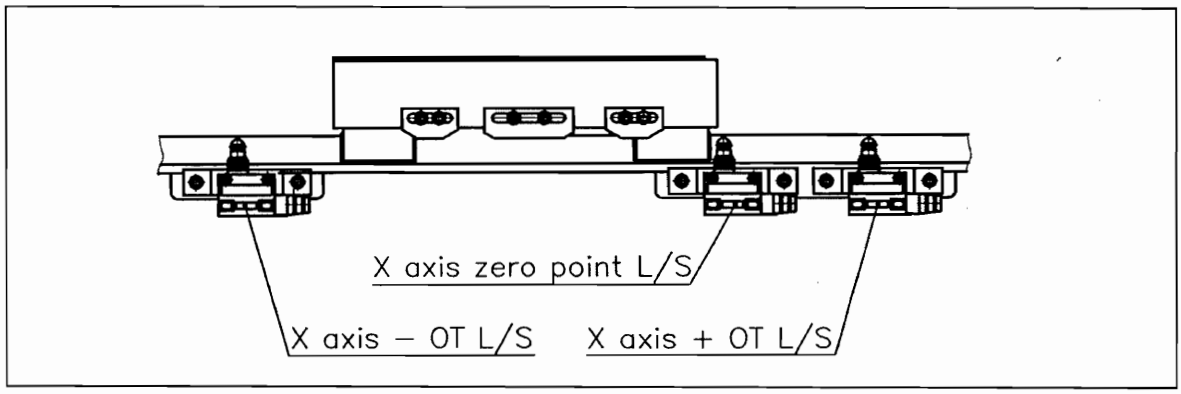

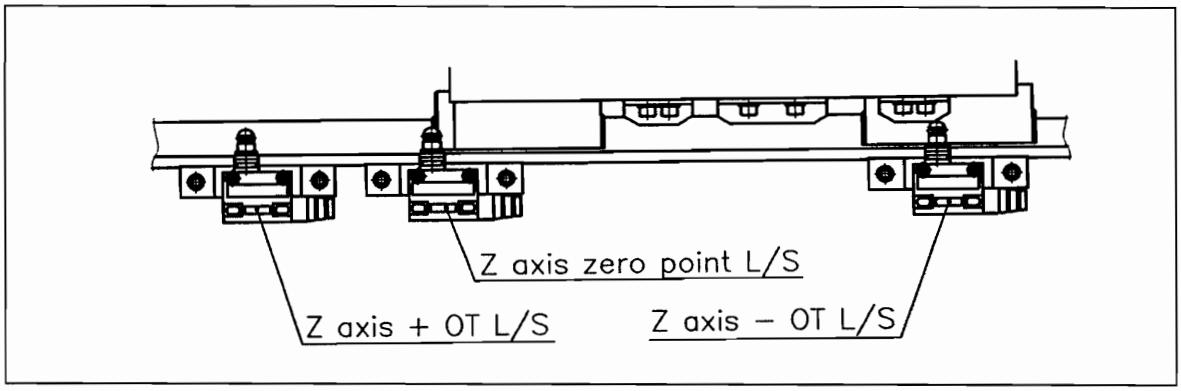

(2) Relations between zero point dog and zero point location

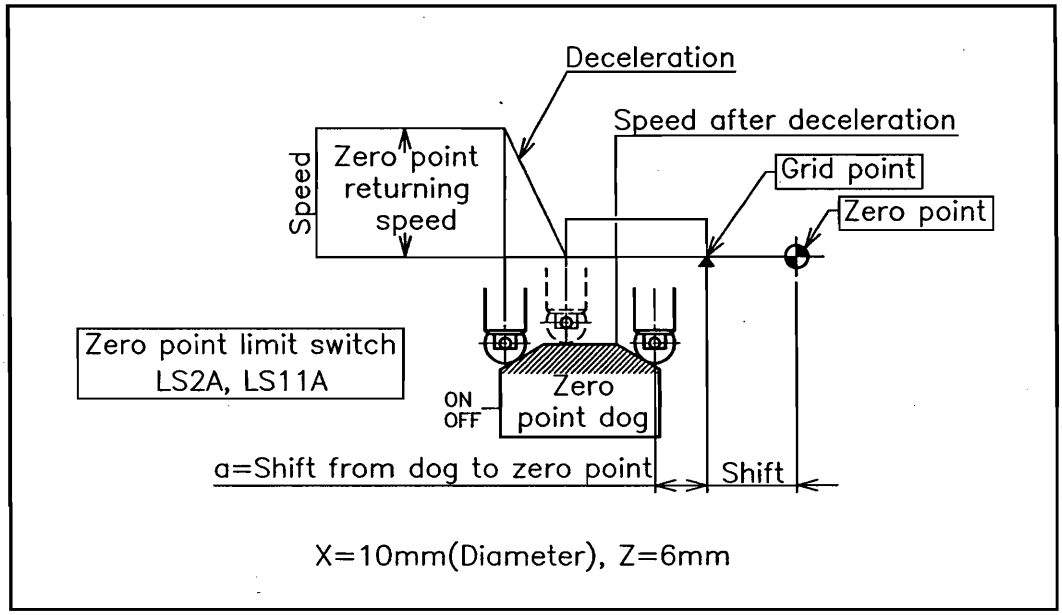

a = Shift from dog to zero point

X = 12mm(Diameter), Z = 6mm

(3) Confirmation of zero point dog location by diagnosis function.

Confirm the limit switch (LS2A, LS11A) signal with DGN.

DGN NO	7	6	5	4	3	2	1	0	
X0009								1	* DECX
							1		* DECZ

press limit switch [0]

Release limit switch [1]

After carrying out zero point return, set zero point counter to 0.

After moving turret head to the negative direction, return, it to zero point by handle feed.

Stop the handle at the point where bit 0 is-just changed to 1. At this time, the value obtained by subtracting shift from the current value is "a range". You should adjust the zero point dog location beyond "a range"

4-9. How to operate parts catcher (Option)

1. Feature

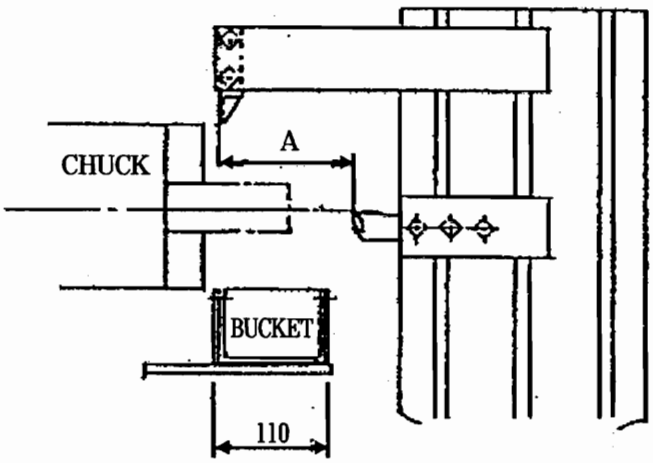

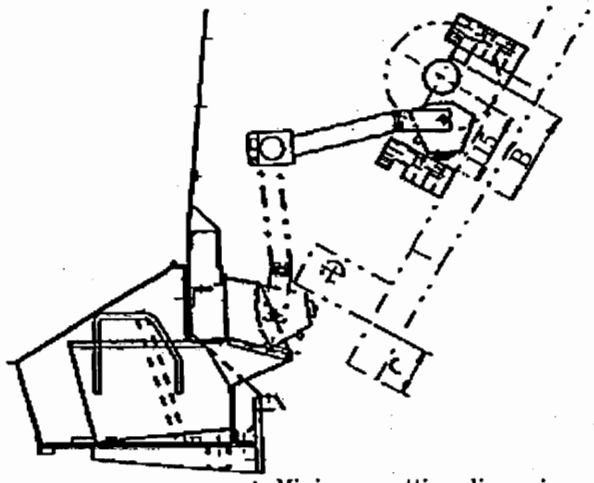

* Minimum setting dimension

unit : mm

A	B	C
115	135	75

2. Pneumatic diagram

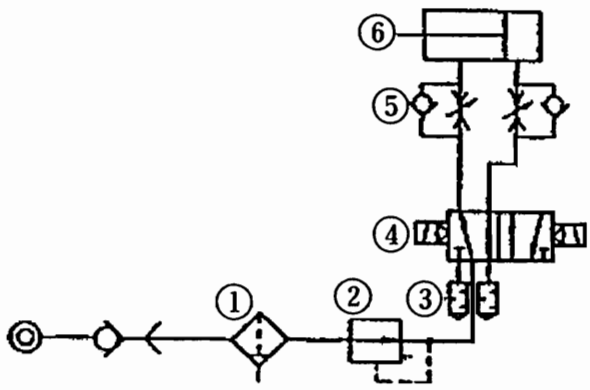

No.	Parts name	Spec.	Quantity	Remark
1	Filter, air	W3000-8-F-B	1	CKD
2	Regulator		1	CKD
3	Silence	SLW-8A	2	CKD
4	Sol, V/V	4KA320-08	1	CKD
5	Speed controller	ESC-8-PT ¼-0	2	NITAMOA
6	Cylinder, air	KCM-TA-40-80-RO-D	1	CKD

3. Parts catcher is designed to unload the parts into the work box, automatically combine with bar feeder or bar pulling system.

4. Command

Command	Function	Remark
M64	Parts catcher out	Move out, and discharge part into external work box.
M63	Parts ceatcher in	Move in to the position off catching cut off part.

M63, M64 is valid with "MDI" or "MEMORY" mode.

5. Adjusting & caution

1) Spcial out-off tool edge on the top of table should be setted at least a longer than other tool's edge.

2) Adjacent tool to cut-off tool holder should be located at least B long from cut-off tool edge.

3) Holder, located on the bottom table, should be setted at least C long from edge of bottom table.

4) You must adjust parts catcher arm within(z direction) for proper dropping position

5) 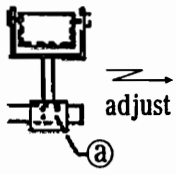

Loose ⓐscrews and adjust arm position and fasten.

6) Drill the setscrew seat use ø5.0 drill and make seat at least 3mm deep.

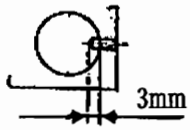

7) Fasten setscrew and nut for locking setscrew.

8) Air pressure : MIN 4kg/㎠, MAX 6kg/㎠

9) Cutoff tool must feed x-direction to cut off.

10) Must check the clearance between chuck, chuck jaw(open & close position) and parts before operating part catcher.

11) Parts catcher was set with standard chuck & soft jaw, you must adjust the parts catcher arm is case of bigger chuck or custom made jaws.

12) Extreme caution is required, for new cycle after cut off, use G04 function for delaying time in after M83, If not, it may cause serious damage on the parts catcher and machine.

13) Do not adjust cylinder speed too high. It might cause parts cather damage.
Optimum cycle time : 3~4sec/cycle.

14) MAX size of part
Diameter ø38
Length 50mm
Weight 500g/part

15) Parts may rolling out after cut off, with high spindle rpm. Do not use top rpm during cut off.

16) User is responsible for all damages caused by improper operation & adjusting.

17) Please contact local dealer or maker, in case of modifying parts catcher for technical advices.

Alarm List

1) Program errors(P/S alarm)

No.	Message	Contents
000	PLEASE TURN OFF POWER	A parameter which requires the power off was input, turn off power
001	TH PARITY ALARM	TH alarm(A character with incorrect parity was input). Correct the tape.
002	TV PARITY ALARM	TV alarm(The number of characters in a block is odd). This alarm will be generated only when the TV check is effective.
003	TOO MANY DIGITS	Data exceeding the maximum allow able number of digits was input(Refer to the item of max. programmable dimensions).
004	ADDRESS NOT FOUND	A numeral or the sign "-" was input without an address at the beginning of a block. Modify the program.
005	NO DATA AFTER ADDRESS	The address was not followed by the appropriate data but was followed by an other address or EOB code. Modify the program.
006	ILLEGAL USE OF NEGATIVE SIGN	Sign "-" input error(Sign "-"was input after an address with which it cannot be used. Or two or more "-"signs were input). Modify the program.
007	ILLEGAL USE OF DECIMAL POINT	Decimal point "." input error(A decimal point was input after an address with which it can not be used. Or two decimal points were input.) Modify the program.
009	ILLEGAL ADDRESS INPUT	Unusable character was input in significant area. Modify the program.
010	IMPROPER G-CODE	An unusable G code ro G code correconding to the function not provided is specified Modify the program

No.	Message	Contents
011	NO FEEDRATE COMMANDED	Feedrate was not commanded to a cutting feed or the feedrate was inadequate. Modify the program.
014	ILLEGAL LEAD COMMAND	In variable lead threading, the lead incremental and decremental out-putted by address K exceed the maximum command value or a command such that the lead becomes a negative value is given. Modify the program.
020	OVER TOLERANCE OF RADIUS	In circular interpolation(G02 or G03), difference of the distance between the start point and the center of an arc and that between the end point and the center of the arc exceeded the value specified in parameter No.3410
021	ILLEGAL PLANE AXIS COMMANDED	An axis not included in the selected plane(by using G17, G18, G19) was commanded in circular interpolation. Modify the program.
022	CIRCULAR INTERPOLATION	In circular interpolation, radius R, or the distance between the start point and the center of the arc, I, J, or K, has not been specified.
020	G NO CIRCLE RADIUS	When circular interpolation is specified, neither R(specifying an arc radius), or I, J, and K (specifying the distance from a start point to the center) is specified.
023	ILLEGAL RADIUS COMMAND	In circular interpolation by radius designation, negative value was commanded for address R. Modify the program.
028	ILLEGAL PLANE SELECT	In the plane selection command, two or more axes in the same direction are commanded. Modify the program.
029	ILLEGAL OFFSET VALUE	The offset values specified by T code is too large. Modify the program.
030	ILLEGAL OFFSET NUMBER	The offset number in T function specified for tool offset is too large. Modify the program.

No.	Message	Contents
031	ILLEGAL P COMMAND IN G10	In setting an offset amount by G10, the offset number following address P was excessive or it was not specified. Modify the program.
032	ILLEGAL OFFSET VALUE IN G10	In setting an offset amount by G10 or in writing an offset amount by system variables, the offset amount was excessive.
033	NO SOLUTION AT NRC	A point of intersection cannot be determined for tool nose radius compensation. Modify the program.
034	NO CIRC ALLOWED IN ST-UP/EXT BLK	The start up or cancel was going to be performed in the G02 or G03 mode in tool nose radius compensation. Modify the program.
035	CAN NOT COMMANDED G31	Skip cutting(G31) was specified in tool nose radius compensation mode. Modify the program.
037	CAN NOT CHANGE PLANE IN NRC	The offset plane is switched in tool nose radius compensation. Modify the program.
038	INTERFERENCE IN CIRCULAR BLOCK	Overcutting will occur in tool nose radius compensation because the arc start point or end point coincides with the arc center. Modify the program.
039	CHF/CNR NOT ALLOWED IN NRC	Chamfering or corner R was specified with a startup, a cancel, or switching between G41 and G42 in tool nose radius compensation. The program may cause overcutting to occur in chamfering or corner R. Modify the program.
040	INTERFERENCE IN G90/G94 BLOCK	Overcutting will occur in tool nose radius compensation in canned cycle G90 or G94. Modify the program.
041	INTERFERENCE IN NRC	Overcutting will occur in tool nose radius compensation. Modify the program
046	ILLEGAL REFERENCE RETURN COMMAND	Other than P2, P3 and P4 are commanded for 2nd, 3rd and 4th reference position return command

No.	Message	Contents
050	CHF/CNR NOT ALLOWED IN THRD BLK	Chamfering or corner R is commanded in the thread cutting block. Modify the program.
051	MISSING MOVE AFTER CHF/CNR	Improper movement or the move distance was specified in the block next to the chamfering or corner R block. Modify the program.
052	CODE IS NOT G01 AFTER CHF/CNR	The block next to the chamfering or corner R block is not G01. Modify the program.
053	TOO MANY ADDRESS COMMANDS	In the chamfering and corner R commands, two or more of I, K and R are specified. Otherwise, the character after a comma(",") is not C or R in direct drawing dimensions programming. Modify the program.
054	NO TAPER ALLOWED AFTER CHF/CNR	A block in which chamfering in the specified angle or the corner R was specified includes a taper command. Modify the program.
055	MISSING MOVE VALUE IN CHF/CNR	In chamfering or corner R block, the move distance is less than chamfer or corner R amount.
056	NO END POINT & ANGLE IN CHF/CNR	Neither the end point nor angle is specified in the command for the block next to that for which only the angle is specified(A). In the chamfering common, I(K) is commanded for the X(Z) axis.
057	NO SOLUTION OF BLOCK END	Block end point is not calculated correctly in direct dimension drawing programming.
058	END POINT NOT FOUND	Block end point is not found in direct dimension drawing programming.
059	PROGRAM NUMBER NOT FOUND	In an external program number search or external workpiece number search, a specified grogram number was not found. Otherwise, a program specified for searching is being edited in background processing. Check the program number and external signal. Or discontinue the background editing.

No.	Message	Contents
060	SEQUENCE NUMBER NOT FOUND	Commanded sequence number was not found in the sequence number search. Check the sequence number.
061	ADDRESS P/Q NOT FOUND IN G70~G73	Address P or Q is not specified in G70, G71, G72 or G73 command. Modify the program.
062	ILLEGAL COMMAND IN G71~G76	1. The depth of cut in G71 or G72 is zero or negative value. 2. The repetitive count in G73 is zero or negative value. 3. The negative value is specified to △i or △k is zero in G74 or G75. 4. A value other than zero is specified to address U or W, though △i or △k is zero in G74 or G75. 5. A negative value is specified to △d, though the relief direction in G74 or G75 is determined. 6. Zero or a negative value is specified to the height of thread or depth of cut of firsh time in G76. 7. The specified minimum depth of cut in G76 is greater than the height of thread. 8. An unusable angle of tool tip is specified in G76. Modify the program.
063	SEQUENCE NUMBER NOT FOUND	The sequence number specified by address P in G70, G71, G72 or G73 command cannot be searched. Modify the program.
064	SHAPE PROGRAM NOT MONOTONOUSLY	A target shape which is not monotonous increase or decrease was specified in a repetitive canned cycle(G71 or G72).
065	ILLEGAL COMMAND IN G71~G73	1. G00 or G01 is not commanded at the block with the sequence number which is specified by address P in G71, G72, or G73 command. 2. Address Z(W) or X(U) was commanded in the block with a sequence number which is specified by address P in G71 or G72, respectively. Modify the program.
066	IMPROPER G-GODE IN G71~G73	An unallowable G code was commanded between two blocks specified by address P in G71, G72, or G73. Modify the program.

No.	Message	Contents
067	CAN NOT OPERATE IN MDI MODE	G70, G71, G72, or G73 command with address P and Q was specified. Modify the program.
069	FORMAT ERROR IN G70~G73	The final move command in the blocks specified by P and Q of G70, G71, G72 or G73 ended with chamfering or corner R.
070	NO PROGRAM SPACE IN MEMORY.	The memory area is insufficient. Delete any unnecessary programs, then retry.
071	DATA NOT FOUND	The address to be searched was not found. Or the program with specified program number was not found in program number search. Check the data.
072	TOO MANY PROGRAMS	The number of programes to be stored exceeded 63(basic), 125(option), 200(option), 400(option), or 1000(option). Delete unnecessary programs and execute program registration again.
073	PROGRAM NUMBER ALREADY IN USE	The commanded program number has already been used. Change the porgram number or delete unnecessary programs and execute program registration again.
074	ILLEGAL PROGRAM NUMBER	The program number is other than 1 to 9999. Modify the program number.
075	PROTECT	An attempt was made to register a program whose number was protected.
076	ADDRESS P NOT DEFINED	Address P(program number) was not commanded in the block which includes an M98, G65, or G66 command. Modify the program.
077	SUB PROGRAM NESTING ERROR	The subprogram was called in five folds. Modify the program.

No.	Message	Contents
078	NUMBER NOT FOUND	A program number or a sequence number which was specified by address P in the block which includes an M98, M99, M65 or G66 was not found. The sequence number specified by a GOTO statement was not found. Otherwise, a called program is being edited in background processing. Correct the program, or discontinue the background editing.
079	PROGRAM VERIFY ERROR	In memory or program collation a program in memory does not agree with that read from an external I/O device. Check both the programs in memory and those from the external device.
080	G37 ARRIVAL SIGNAL NOT ASSERTED	In the automatic tool compensation function (G36, G37), the measurement position reach signal(XAE or ZAE) is not turned on whithin an area specified in parameter 6254(value e). This is due to a setting or operator error.
081	OFFSET NUMBER NOT FOUND IN G37	Automatic tool compensation(G36, G37) was specified without a T code(Automatic tool compensation function). Modify the program.
082	T-CODE NOT ALLOWED IN G37	T code and automatic tool compensation(G36, G37) were specified in the same block (Automatic tool compensation function).Modify the program.
083	ILLEGAL AXIS COMMAND IN G37	In automatic tool compensation(G36, G37), an invalid axis was specified or the command is incremental. Modify the program.
085	COMMUNICATION ERROR	When entering data in the memory by using Reader/Puncher interface, an overrun, parity or framing error was generated. The number of bits of input data or setting of baud rate or specification No. of I/O unit is incorrect.
086	DR SIGNAL OFF	When entering data in the memory by using Reader/Puncher interface, the ready signal(DR) of reader/puncher was turned off. Power supply of I/O unit is off or cable is not connected or a P.C.B. is defective.

No.	Message	Contents
087	BUFFER OVERFLOW	When entering data in the memory by using Reader/Puncher interface, though the read terminate command is specified, input is not interrupted after 10 characters read. I/O unit or P.C.B. is defective.
088	G LAN FILE TRANS ERROR(CHANNEL-1)	File data transfer over the OSI-Ethernet was terminated as a result of a transfer error.
089	G LAN FILE TRANS ERROR(CHANNEL-2)	File data tarnsfer over the OSI-Ethernet was terminated as a result of a transfer error.
090	REFERENCE RETURN INCOMPLETE	The reference position return cannot be performed normally because the reference position return start point is too close to the reference position or the speed is too slow. Separate the start point far enough from the reference position, or specify a sufficiently fast speed for reference position return. Check the program contents.
091	REFERENCE RETURN INCOMPLETE	In the automatic operation halt state, manual reference position return cannot be performed.
092	AXES NOT ON THE REFERENCE POINT	The commanded axis by G27(Reference position return check) did not return to the reference position.
094	P TYPE NOT ALLOWED (COORD CHG)	P type cannot be specified when the program is restarted (After the automatic operation was interrupted, the coordinate system setting operation was performed). Perform the correct operation according to the operator's manual.
095	P TYPE NOT ALLOWED (EXT OFS CHG)	P type cannot be specified when the program is restarted. (After the automatic operation was interrupted, the external workpiece offset amount changed). Perform the correct operation according to the operator's manual
096	P TYPE NOT ALLOWED (WRK OFS CHG)	P type cannot be specified when the program is restarted. (After the automatic operation was interrupted, the workpiece offset amount changed). Perform the correct operation according to the operator's manual.

No.	Message	Contents
097	P TYPE NOT ALLOWED (AUTO EXEC)	P type cannot be directed when the program is restarted. (After power ON, after emergency stop or P/S alarm 94 to 97 were reset, no automatic operation was performed). perform automatic operation.
098	G28 FOUND IN SEQUENCE RETURN	A command of the program restart was specified without the reference position return operation after power ON or emergency stop, and G28 was found during search. Perform the reference position return.
099	MDI EXEC NOT ALLOWED AFT. SEARCH	After completion of search in program restart, a move command is given with MDI.
100	PARAMETER WRITE ENABLE	On the PARAMETER(SETTING) screen, PWE (parameter writing enabled) is set to 1. Set it to 0, then reset the system.
101	PLEASE CLEAR MEMORY	The power turned off while rewriting the memory by program edit operation. If this alarm has occurred, press 〈RESET〉 while pressing 〈PROG〉, and only the program being edited will be deleted. Register the deleted program.
109	P/S ALARM	A value other than 0 or 1 was specified after P in the G08 code, or no value was specified.
111	CALCULATED DATA OVERFLOW	The result of calculation is out of the allowable range (-10^{47} to -10^{-29}, 0, and 10^{-29} to 10^{47}).
112	DIVIDED BY ZERO	Division by zero was specified(including tan 90°). Modify the program.
113	IMPROPER COMMAND	A function which cannot be used in custom macro is commanded. Modify the program.
114	FORMAT ERROR IN MACRO	There is an error in other formats than 〈Formula〉. Modify the program.

No.	Message	Contents
115	ILLEGAL VARIABLE NUMBER	A value not defined as a variable number is designated in the custom macro or in high-speed cycle cutting. The header contents are improper in a high speed cycle cutting. This alarm is given in the following cases : 1. The header corresponding to the specified machining cycle number called is not found. 2. The cycle connection data value is out of the allowable range(0-999). 3. The number of data in the header is out of the allowable range(0-32767). 4. The start data variable number of executable format data is out of the allowable range(#20000-#85535). 5. The storing data variable number of executable format data is out of the allowable range(#85535). 6. The storing start data variable number of executable format data overlapped with the variable number used in the header. Modify the program.
116	WRITE PROTECTED VARIABLE	The left side of substitution statement is a variable whose substitution is inhibited. Modify the program.
118	PARENTHESIS NESTING ERROR	The nesting of bracket exceeds the upper limit (quintuple). Modify the program.
119	ILLEGAL ARGUMENT	The SQRT argument is negative, BCD argument is negative, or other values than 0 to 9 are present on each line of BIN argument. Modify the program.
122	QUADRUPLE MACRO MODAL-CALL	The macro modal call is specified in double. Modify the program.
123	CAN NOT USE MACRO COMMAND IN DNC	Macro control command is used during DNC operation. Modify the program.
124	MISSING END STATEMENT	DO-END does not correspond to 1 : 1. Modify the program.
125	FORMAT ERROR IN MACRO	〈Formula〉 format is erroneous. Modify the program.

No.	Message	Contents
126	ILLEGAL LOOP NUMBER	In DOn, 1 ≦ n ≦ 3 is not established. Modify the program.
127	NC, MACRO STATEMENT IN SAME BLOCK	NC and custom macro commands coexist. Modify the program.
128	ILLEGAL MACRO SEQUENCE NUMBER	The sequence number specified in the branch command was not 0 to 9999. or, it cannot be searched. Modify the program.
129	ILLEGAL ARGUMENT ADDRESS	An address which is not allowed in 〈Argument Designation〉 is used. Modify the program.
130	ILLEGAL AXIS OPERATION	An axis control command was given by PMC to an axis controlled by CNC. or an axis control command was given by CNC to an axis controlled by PMC. Modify the program.
131	TOO MANY EXTERNAL ALARM MESSAGES	Five or more alarms have generated in external alarm messge. Consult the PMC ladder diagram to find the cause.
132	ALARM NUMBER NOT FOUND	No alarm No. concerned exists in external alarm message clear. Check the PMC ladder diagram.
133	ILLEGAL DATA IN EXT. ALARM MSG	Small section data is erroneous in external alarm message or external operator message Check the PMC ladder diagram.
135	SPINDLE ORIENTATION PLEASE	Without any spindle orientation, an attempt was made for spindle indexing. Perform spindle orientation.
136	C/H-CODE & MOVE CMD IN SAME BLK.	A move command of other axes was specified to the same block as spindle indexing addresses C, H. Modify the program.
137	M-CODE & MOVE CMD IN SAME BLK.	A move command of other axes was specified to the same block as M-code related to spindle indexing. Modify the program.

No.	Message	Contents
138	G SUPERIMPOSED DATA OVERFLOW	In PMC axis control. the increment for pulse distribution on the CNC and PMC side are too large when the superimposed control extended function is used.
139	CAN NOT CHANGE PMC CONTROL AXIS	An axis is selected in commanding by PMC axis control. Modify the program.
145	ILLEGAL COMMAND G112/G113	The conditions are incorrect when the polar coordinate interpolation starts or it is canceled. 1. In modes other than G40, G12.1/G13.1 was specified. 2. An error is found in the plane selection. Parameters No. 5460 and No. 5461 are incorrectly specified. Modify the value of program or parameter
146	IMPROPER G CODE	G codes which cannot be specified in the polar coordinate interpolation mode was specified. Modify the program.
150	ILLEGAL TOOL GROUP NUMBER	Tool Group No. exceeds the maximum allowable value. Modify the program.
151	TOOL GROUP NUMBER NOT FOUND	The tool group commanded in the machining program is not set. Modify the value of program or parameter.
152	NO SPACE FOR TOOL ENTRY	The number of tools within one group exceeds the maximum value registrable. Modify the number of tools
153	T-CODE NOT FOUND	In tool life data registration, a T code was not specified where one should be. Correct the program.
155	ILLEGAL T-CODE IN M06	In the machining program, M06 and T code in the same block do not correspond to the group in use. Correct the program.
156	P/L COMMAND NOT FOUND	P and L commands are missing at the head of program in which the tool group is set. Correct the program.
157	TOO MANY TOOL GROUPS	The number of tool groups to be set exceeds the maximum allowable value(See parameter No. 6800 bit 0 and 1). Modify the program.

No.	Message	Contents
158	ILLEGAL TOOL LIFE DATA	The tool life to be set is too excessive. Modify the setting value.
159	TOOL DATA SETTING INCOMPLETE	During executing a life data setting program, power was turned off. Set again.
160	MISMATCH WAITING M-CODE(only with two path control)	Different M code is commanded in heads 1 and 2 as waiting M code. Modify the program.
161	COMMAND G68/G69 INDEPENDENTLY(only with two path control)	G68 and G69 are not independently commanded in balance cut. Modify the program.
169	ILLEGAL TOOL GEOMETRY DATA(only with two path control)	Incorrect tool figure data in interference check.
175	ILLEGAL G107 COMMAND	Conditions when performing circular interpolation start or cancel not correct. To change the mode to the cylindrical interpolation mode, specify the command in a format of "G07.1 rotation-axis name radius of cylinder."
176	IMPROPER G-CODE IN G107	Any of the following G codes which cannot be specified in the cylindrical interpolation mode was specified. 1. G codes for positioning, such as G28, G76, G81~G89, including the codes specifying the rapid traverse cycle 2. G codes for setting a coordinate system : G50, G52 3. G code for selecting coordinate system : G53, G54~G59 Modify the program.
177	CHECK SUM ERROR (G05 MODE)	Check sum error. Modify the program.
178	G05 NOT ALLOWED IN G41/G42 MODE	G05 was commanded in the G41/G42 mode. Correct the program.
179	PARAM. (NO.7510) SETTING ERROR	The number of controlled axes set by the parameter 7510 exceeds the maximum number. Modify the setting value.

No.	Message	Contents
180	COMMUNICATION ERROR(REMOTE BUF)	Remote buffer connection alarm has generated. Confirm the number of cables, parameters and I/O device.
194	SPINDLE COMMAND IN SYNCHRO-MODE	A contour control mode, spindle positioning(Cs-axis control) mode, or rigid tapping mode was specified during the serial spindle synchronous control mode. Correct the program so that the serial spindle synchronous control mode is released in advance.
197	C-AXIS COMMANDED IN SPINDLE MODE	The program specified a movement along the Cf-axis when the signal CON(DGN=G027#7) was off. Correct the program, or consult the PMC ladder diagram to find the reason the signal is not turned on.
199	MACRO WORD UNDEFINED	Undefined macro word was used. Modify the custom macro.
200	ILLEGAL S CODE COMMAND	In the rigid tapping, as S value is out of the range or is not specified. The maximum values for S which can be specified in rigid tapping is set in parameters 5241 to 5243. Change the setting in the parameter or modify the program.
201	FEEDRATE NOT FOUND IN RIGID TAP	In the rigid tapping, no F value is specified. Correct the program.
202	POSITION LSI OVERFLOW	In the rigid tapping, spindle distribution value is too large.
203	PROGARM MISS AT RIGID TAPPING	In the rigid tapping, position for a rigid M code(M29) or an S command is incorrect. Modify the program.
204	ILLEGAL AXIS OPERATION	In the rigid tapping, an axis movement is specified between the rigid M code(M29) block and G84(G88) block. Modify the program.
205	RIGID MODE DI SIGNAL OFF	Rigid tapping signal(DGNG061 #1) is not 1 when G84(G88) is executed though the rigid M code(M29) is specified. Consult the PMC ladder diagram to find the reason the signal is not turned on.

No.	Message	Contents
210	CAN NOT COMMAND M198/M199	1. M198 and M199 are executed in the schedule operation. or M198 is executed in the DNC operation. Modify the program. 2. In a multiple repetitive pocketing canned cycle, an interrupt macro was specified, and M199 was executed.
211	G31 (HIGH) NOT ALLOWED IN G99	G31 is commanded in the per revolution command when the high speed skip option is provided. Modify the program.
212	ILLEGAL PLANE SELECT	The direct drawing dimensions programming is commanded for the plane other than the Z-X plane. Correct the program.
213	ILLEGAL COMMAND IN SYNCHRO-MODE	Movement is commanded for the axis to be synchronously controlled.
214	ILLEGAL COMMAND IN SYNCHRO-MODE	Coordinate system is set or tool compensation of the shift type is executed in the synchronous control. Correct the program.
217	DUPLICATE G251 (COMMANDS)	G51.2 or G251 is further commanded in the polygon maching mode. Modify the program.
218	NOT FOUND P/Q COMMAND IN G251	P or Q is not commanded in the G251 block, or the command value is out of the range. Modify the program.
219	COMMAND G250/G251 INDEPENDENTLY	G251 and G250 are not independent blocks.
220	ILLEGAL COMMAND IN SYNCHR-MODE	In the synchronous operation. movement is commanded by the NC program. or PMC axis control interface for the synchronous axis.
221	ILLEGAL COMMAND IN SYNCHR-MODE	Polygon machining synchronous operation and axis control or balance cutting are executed at a time. Modify the program.
224	RETURN TO REFERENCE POINT	Not returned to reference point before cycle start.

No.	Message	Contents
225	SYNCHRONOUS/MIXED CONTROL ERROR(only with two path control only)	This alarm is generated in the following circumstances. (Searched for during synchronous and mixed control command.) 1. When there is a mistake in axis number parameter setting 2. When there is a mistake in control commanded. Modify the program or the parameter.
226	ILLEGAL COMMAND IN SYNCHRO-MODE(only with two path control only)	A travel command has been sent to the axis being synchronized in synchronous mode. Modify the program or the parameter.
229	CAN NOT KEEP SYNCHRO-STATE(only with two path control only)	This alarm is generated in the following circumstances. 1. When the synchro/mixed state could not be kept due to system overload. 2. The above condition occurred in CNC devices(hardware) and synchrostate could not be kept(This alarm is not generated in normal use conditions).
231	FORMAT ERROR IN G10 OR L50	Any of the following errors occurred in the specified format at the programmable parameter input. 1. Address N or R was not entered. 2. A number not specified for a parameter was entered. 3. The axis number was too large. 4. An axis number was not specified in the axis-type parameter. 5. An axis number was specified in the parameter which is not an axis type 6. An attempt was made to reset bit 4 of parameter 3202(NE9) or change parameter 3210(PSSWD) when they are protected by a password. Correct the program.
232	ILLEGAL AXIS COMMAND IN HELICAL	Three or more axes were specified as helical axes in the helical interpolation mode.
233	DEVICE BUSY	When an ateempt was made to use a unit such as that connected via the RS-232-C interface, other users were using it.

No.	Message	Contents
239	BP/S ALARM	While punching was being performed with the function for controlling external I/O units, background editing was performed.
240	BP/S ALARM	Background editing was performed during MDI operation.
244	P/S ALARM	In the skip function activated by the torque limit signal. the number of accumulated erroneous pulses exceed 32767 before the signal was input. Therefore, the pulses cannot be corrected with one distribution. Change the conditions, such as feedrates along axes and torque limit, and try again.
245	T-CODE NOT ALOWED IN THIS BLOCK	One of the G codes, G50, G10, and G04, which cannot be specified in the same block as a T code, was specified with a T code.
5010	END OF RECORD	The end of record(%) was specified.
5016	ILLEGAL COMBINATION OF M CODE	M codes which belonged to the same group were specified in a block. Alternatively, an M code which must be specified without other M codes in the block was specified in a block with other M codes.
5018	POLYGON AXIS SPEED ERROR	The rotating speed ratio of the command value cannot be maintained in the G51.2 mode, because the speed of the spindle or the polygon turning synchronous axis exceeds the clamp value or it is too slow.
5020	PARAMETER OF RESTART ERROR	An erroneous parameter was specified for restarting a program.
5030	ILLEGAL COMMAND (G100)	The end command(G110) was specified before the registration start command(G101, G102, or G103) was specified for the B-axis.
5031	ILLEGAL COMMAND (G100, G102, G103)	While a registration start command(G101, G102 or G103) was being executed, another registration start command was specified for the B-axis.

No.	Message	Contents
5032	NEW PRG REGISTERED IN B-AXIS MOVE	While the machine was moving about the B-axis, at attempt was made to register another move command.
5033	NO PROG SPACE IN MEMORY B-AXIS	Commands for movement about the B-axis were not registered because of insufficient program memory.
5034	PLURAL COMMAND IN G110	Multiple movements were specified with the G110 code for the B axis.
5035	NO FEEDRATE COMMANDED B-AXIS	A feedrate was not specified for cutting feed about the B-axis.
5036	ADDRESS R NOT DEFINED IN G81~G86	Point R was not specified for the canned cycle for the B-axis.
5037	ADDRESS Q NOT DEFINED IN G83	Depth of cut Q was not specified for the G83 code(peck drilling cycle). Alternatively, 0 was specified in Q for the B-axis
5038	TOO MANY START M-CODE COMMAND	More than six M codes for starting movement about the B-axis were specified.
5039	START UNREGISTERED B-AXIS PROG	An attempt was made to execute a program for the B-axis which had not been registered.
5040	CAN NOT COMMANDED B-AXIS MOVE	The machine could not move about the B-axis because parameter No. 8250 was incorrectly specified, or because the PMC axis system could not be used.
5041	CAN NOT COMMANDED G110 BLOCK	Blocks containing the G110 codes were successively specified in tool-tip radius compensation for the B-axis.
5046	ILLEGAL PARAMETER (ST.COMP)	Parameters related to straightness compensation have been erroneously specified. Possible causes are as follows : 1. Invalid axis number have been assigned to move or compensation axes. 2. The number of pitcherror compensation points between the maximum positive and maximum negative points exceeds 128.

No.	Message	Contents
5046	ILLEGAL PARAMETER (ST.COMP)	3. Straightness compensation point numbers have been assigned in other than ascending order. 4. Straightness compensation points could not belocated between the maximum positive and maximum negative pitch error compensation points. 5. The amount of compensation per compensation point is too large or too small.
5051	M-NET CODE ERROR	Abnormal character reception. (Characters except code used to transmit).
5052	M-NET ETX ERROR	"ETX" code is abnormal.
5053	M-NET CONNECT ERROR	Connection time supervision error (parameter No.175)
5054	M-NET RECEIVE ERROR	Boring time supervision error (parameter No.176)
5055	M-NET PRT/FRM ERROR	Vertical parity or framing error detection.
5056	M-NET BOARD SYSTEM DOWN	Transmit time-out error(parameter No.177) ROM parity error. CPU interruption detection of not listed above.
5058	G35/G36 FORMAT ERROR	A command for changing the major axis was specified during circular threading. Alternatively, the length of the major axis was specified to be 0.
5059	RADIUS IS OUT OF RANGE	During circular interpolation, the center of the arc specified with I, J, and K caused the radius to exceed nine digits.
5073	NO DECIMAL POINT	A decimal point is not specified for a command for which a decimal point must be specified.
5074	ADDRESS DUPLICATION ERROR	The same address appears more than once in a block. Alternatively, a block contains two or more G codes belonging to the same group.
5082	DATA SERVER ERROR	Details are displayed on the data server message screen.

2) Background edit alarm

No.	Message	Contents
070 to 074 085 to 087	BP/S alarm	BP/S alarm occurs in the same number as the P/S alarm that occurs in ordinary program edit.
140	BP/S alarm	It was attempted to select or delete in the background a program being selected in the foreground(Note). Use background editing correctly.

Note

Alarm in background edit is displayed in the key input line of the background edit screen instead of the ordinary alarm screen and is resettable by any of the MDI key operation.

3) Absolute pulse coder (APC) alarm

No.	Message	Contents
300	n AXIS NEED ZRN	Manual reference position return is required for the nth-axis(n=1-8).
301	APC ALARM : n AXIS COMMUNICATION	nth-axis(n=1-8) APC communication error. Failure in data transmission Possible causes include a faulty APC, cable, or servo interface module.
302	APC ALARM : n AXIS OVER TIME	nth-axis(n=1-8) APC overtime error. Failure in data transmission. Possible causes include a faulty APC, cable, or servo interface module.
303	APC ALARM : n AXIS FRAMING	nth-axis(n=1-8) APC framing error. Failure in data transmission. Possible causes include a faulty APC, cable, or servo interface module.
304	APC ALARM : n AXIS PARITY	nth-axis(n=1-8) APC parity error. Failure in data transmission. Possible causes include a faulty APC, cable, or servo interface module.
305	APC ALARM : n AXIS PULSE MISS	nth-axis(n=1-8) APC pulse error alarm. APC alarm. APC or cable may be faulty.
306	APC ALARM : n AXIS BATTERY ZERO	nth-axis(n=1-8) APC battery voltage has decreased to a low level so that the data cannot be held. APC alarm. Battery or cable may be faulty.
307	APC ALARM : n AXIS BATTERY DOWN 1	nth-axis(n=1-8) axis APC battery voltage reaches a level where the battery must be renewed. APC alarm. Replace the battery.
308	APC ALARM : n AXIS BATTERY DOWN 2	nth-axis(n=1-8) APC battery voltage has reached a level where the battery must be renewed(including when power is OFF). APC alarm Replace battery.
309	APC ALARM : n AXIS ZRN IMPOSSIBLE	An attempt was made to perform reference position return without rotating the motor through one or more turns. Rotate the motor through one or more turns, turn off the power then on again, then perform reference position return.

4) Serial pulse coder (SPC) alarms

When either of the following alarms is issued, a possible cause is a faulty serial pulse coder or cable.

No.	Message	Contents
350	SPC ALARM : n AXIS PULSE CODER	The n axis(axis 1-8) pulse coder has a fault. Refer to diagnosis display No. 202 for details.
351	SPC ALARM : n AXIS COMMUNICATION	n axis(axis 1-8) serial pulse coder communication error(data transmission fault) Refer to diagnosis display No. 203 for details.

- The details of serial pulse coder alarm No.350

The details of serial pulse coder alarm No.350(pulse coder alarm) are displayed in the diagnosis display (No.202) as shown below.

	#7	#6	#5	#4	#3	#2	#1	#0
202		CSA	BLA	PHA	RCA	BZA	CKA	SPH

CSA : The serial pulse coder is defective. Replace it.

BLA : The battery voltage is low. Replace the batteries. This alarm has nothing to do with alarm 350(serial pulse coder alarm).

PHA : The serial pulse coder or feedback cable is defective. Replace the serial pulse coder or cable.

RCA : The serial pulse coder is defective. Replace it.

BZA : The pulse coder was supplied with power for the first time.
Make sure that the batteries are connected.
Turn the power off, then turn it on again and perform a reference position return. This alarm has nothing to do with alarm 350(serial pulse coder alarm).

CKA : The serial pulse coder is defective. Replace it.

SPH : The serial pulse coder or feedback cable is defective. Replace the serial pulse coder or cable.

- The details of serial pulse coder alarm No. 351

The details of serial pulse coder alarm No. 351(communication alarm) are displayed in the diagnosis display (No.203) as shown below.

	#7	#6	#5	#4	#3	#2	#1	#0
203	DTE	CRC	STB	PRM				

DTE : The serial pulse coder encountered a communication error.
The pulse coder, feedback cable, or feedback receiver circuit is defective. Replace the pulse coder, feedback cable, or NC-axis board

CRC : The serial pulse coder encountered a communication error.
The pulse coder, feedback cable, or feedback receiver circuit is defective. Replace the pulse coder, feedback cable, or NC-axis board

STB : The serial pulse coder encountered a communication error.
The pulse coder, feedback cable, or feedback receiver circuit is defective. Replace the pulse coder, feedback cable, or NC-axis board

PRM : An invalid parameter was found. Alarm 417(invalid servo parameter) is also issued.

5) Servo alarms

No.	Message	Contents
400	SERVO ALARM : n AXIS OVERLOAD	The n-th axis(axis 1-8) overload signal is on. refer to diagnosis display No.201 for details
401	SERVO ALARM : n AXIS DRDY OFF	The n-th axis(axis 1-8) servo amplifier READY signal(DRDY) went off.
404	SERVO ALARM : n AXIS DRDY ON	Even though the n-th axis(axis 1-8) READY signal (MCON) went off, the servo amplifier READY signal (DRDY) is still on. or, when the power was turned on, DRDY went on even though MCON was off. Check that the servo interface module and servo amp are connected.
405	SERVO ALARM : (WRONG ZRN)	Position control system fault. Due to an NC or servo system fault in the reference position return, there is the possibility that reference position return could not be executed correctly. Try again from the manual reference position return.
407	SERVO ALARM : EXCESS ERROR	The difference in synchronous axis position deviation exceeded the set value.
409	SERVO ALARM : EXCESS ERROR	An abnormal load on the servo motor was detected. Alternatively, an abnormal load on the spindle motor was detected in Cs mode.

No.	Message	Contents
410	SERVO ALARM : n AXIS EXCESS ERROR	The position deviation value when the n-th axis(axis 1-8) stops is larger than the set value. Note) Limit value must be set to parameter No.1829 for each axis.
411	SERVO ALARM : n AXIS EXCESS ERROR	The position deviation value when the n-th axis(axis 1-8) moves is larger than the set value. Note) Limit value must be set to parameter No.1828 for each axis.
413	SERVO ALARM : n AXIS LSI OVER	The contents of the error register for the n-th axis(axis 1-8) are beyond of the range of -2^{31} to 2^{31}. This error usually occurs as the result of an improperly set parameters.
414	SERVO ALARM : n AXIS DETECT ERROR	N-th axis(axis 1-8) digital servo system fault. Refer to diagnosis display No. 200 and No. 204 for details.
415	SERVO ALARM : n AXIS MOTION OVER	A speed higher than 511875 units/s was attempted to be set in the n-th axis(axis 1-8). This error occurs as the result of improperly set CMR.
416	SERVO ALARM : n AXIS DISCONNECT	Position detection system fault in the n-th axis(axis 1-8) pulse coder(disconnection alarm). Refer to diagnosis display No. 201 for details.
417	SERVO ALARM : n AXIS DIGITAL PARAM	This alarm occurs when the n-th axis(axis 1-8) is in one of the conditions listed below(Digital servo system alarm). 1) The value set in Parameter No.2020(motor form) is out of the specified limit. 2) A proper value(111 or -111) is not set in parameter No. 2022(motor revolution direction). 3) Illegal data(a value below 0, etc.) was set in parameter No. 2023(number of speed feedback pulses per motor revolution). 4) Illegal data(a value below 0, etc.) was set in parameter No. 2024(number of position feedback pulses per motor revolution).

No.	Message	Contents
417	SERVO ALARM : n AXIS DIGITAL PARAM	5) Parameters No.2084 and No.2085(flexible field gear rate) have not been set. 6) A value outside the limit of (1 to the number of control axes) or a noncontinuous value (Parameter 1023(servo axis number) contains a value out of the range from 1 to the number of axes, or an isolated value(for example, 4 not proceded by 3) was set in parameter No.1023(servo axis number).
421	SERVO ALARM : n AXIS EXCESS ER(D)	While the dual position feedback function is being applied, an excessive difference was detected between a semi-closed loop error and closed loop error. Check the dual position conversion factor set in parameter Nos. 2078 and 2079.

- Details of servo alarm No.414

The details of servo alarm No. 414 are displayed in the diagnosis display (No. 200 and No.204) as shown below.

	#7	#6	#5	#4	#3	#2	#1	#0
200	OVL	LV	OVC	HCA	HVA	DCA	FBA	OFA

OVL : An overload alarm is being generated.
(This bit causes servo alarm No. 400. The details are indicated in diagnostic data No.201).

L V : A low voltage alarm is being generated in servo amp.
Check LED.

OVC : A overcurrent alarm is being generated inside of digital servo.

HCA : An abnormal current alarm is being generated in servo amp.
Check LED.

HVA : An over voltage alarm is being generated in servo amp.
Check LED.

DCA : A regenerative discharge circuit alarm is being generated in servo amp.
Check LED.

FBA : A disconnection alarm in being generated.

(This bit causes servo alarm No.416. The details are indicated in diagnostic data No.201)

OFA : An overflow alarm is being generated inside of digital servo.

	#7	#6	#5	#4	#3	#2	#1	#0
204		OFS	MCC	LDA	PMS			

OFS : A current conversion error has occurred in the digital servo.

MCC : A magnetic contactor contact in the servo amplifier has welded.

LDA : The LED indicates that serial pulse coder C is defective

PMS : A feedback pulse error has occurred because the feedback cable is defective.

- Details of servo alarms No.400 and No.416

The details of servo alarms No.400 and No.416 are displayed in the diagnosis display(No.201) as shown below.

	#7	#6	#5	#4	#3	#2	#1	#0
201	ALD			EXP				

When OVL equal 1 in diagnostic data No.200(servo alarm No.400 is being generated) :

ALD **0** : Motor overheating

1 : Amplifier overheating

When FBAL equal 1 in diagnostic data No.200(servo alarm No.416 is being generated) :

ALD	EXP	Alarm details
1	0	Built-in pulse coder disconnection(hardware)
1	1	Separately installed pulse coder disconnection(hardware)
0	0	Pulse coder is not connected due to software.

6) Over travel alarms

No.	Message	Contents
500	OVER TRAVEL : +n	Exceeded the n-th axis(axis 1-8) + side stored stroke limit I (Parameter No.1320 or 1326 Notes).
501	OVER TRAVEL : -n	Exceeded the n-th axis(axis 1-8) - side stored stroke limit I (Parameter No.1321 or 1327 Notes).
502	OVER TRAVEL : +n	Exceeded the n-th axis(axis 1-8) + side stored stroke limit II (Parameter No.1322).
503	OVER TRAVEL : -n	Exceeded the n-th axis(axis 1-8) - side stored stroke limit II (Parameter No.1323).
504	OVER TRAVEL : +n	Exceeded the n-th axis(axis 1-8) + side stored stroke limit III (Parameter No.1324).
505	OVER TRAVEL : -n	Exceeded the n-th axis(axis 1-8) - side stored stroke limit III (Parameter No.1325).
506	OVER TRAVEL : +n	Exceeded the n-th axis(axis 1-8) + side hardware OT.
507	OVER TRAVEL : -n	Exceeded the n-th axis(axis 1-8) - side hardware OT.
508	INTERFERENCE : +n	When n-axis is moving in the positive direction, it interferes with the order tool post(only with two-path control)
509	INTERFERENCE : -n	When n-axis is moving in the negative direction, it interferes with the order tool post(only with two-path control)
510	OVER TRAVEL : +n	A stroke limit check, made before starting movement, found that the end point of a block falls within the plus(+) side inhibited area along the n-axis defined by a stroke limit. Correct the program.
511	OVER TRAVEL : -n	A stroke limit check, made before starting movement, found that the end point of a block falls within the minus(-) side inhibited area along the n-axis defined by a stroke limit. Correct the program.

Note

Over travel No. 504 and No. 505 are provided only with the T series.

Parameters 1326 and 1327 are effective when EXLM(stroke limit switch signal) is on.

7) Overheat alarms

No.	Message	Contents
700	OVERHEAT : CONTROL UNIT	Control unit overheat. Check that the fan motor operaters normally, and clean the air filter.
701	OVERHEAT : FAN MOTOR	The fan motor on the top of the cabinet for the control unit is overheated. Check the operation of the fan motor and replace the motor if necessary.
704	OVERHEAT : SPINDLE	Spindle overheat in the spindle fluctuation detection 1. If the cutting load is heavy, relieve the cutting condition. 2. Check whether the cutting tool is share. 3. Another possible cause is a faulty spindle amp.

8) Rigid tapping alarm

No.	Message	Contents
740	RIGID TAP ALARM : EXCESS ERROR	During rigid tapping, the position deviation of the spindle in the stop state exceeded the setting.
741	RIGID TAP ALARM : EXCESS ERROR	During rigid tapping, the position deviation of the spindle in the stop state exceeded the setting
742	RIGID TAP ALARM : LSI OVER FLOW	During rigid tapping, an LSI overflow occurred on the spindle side.

9) Serial spindle alarms

No.	Message	Contents
749	S-SPINDLE LSI ERROR	A communication error occurred for the serial spindle. The cause may be the disconnection of an optical cable or the interruption of the power to the spindle amplifier. (Note) Unlike alarm NO.750, this alarm occurs when a serial communication alarm is detected after the spindle amplifier is normally activated.
750	SPINDLE SERIAL LINK ERROR	This alarm is generated when the spindle control unit is not ready for starting correctly when the power is turned on in the system with the serial spindle. The four reasons can be considered as follows : 1. An improperly connected optic cable, or the spindle control unit's power is OFF. 2. When the NC power was turned on under alarm conditions other than SU-01 or AL-24 which are shown on the LED display of the spindle control unit. In this case, turn the spindle amplifier power off once and perform startup again. 3. Other reasons(improper combination of hardware) This alarm does not occur after the system including the spindle control unit is activated. 4. The second spindle(when SP2, bit 4 of parameter No. 3701, is 1) is in one of the above conditions 1) to 3). See diagnostic display No. 409 for details.
751	SPINDLE-1 ALARM DETECT(AL-XX)	This alarm indicates in the NC that an alarm is generated in the spindle unit of the system with the serial spindle. The alarm is displayed in form AL-XX(XX is a number). Refer to (11) Alarms displayed on spindle servo unit. The alarm number XX is the number indicated on the spindle amplifier. The CNC holds this number and displays on the screen.

No.	Message	Contents
752	SPINDLE-1 MODE CHANGE ERROR	This alarm is generated if the system does not properly terminate a mode change. The modes include the Cs contouring, spindle positioning, rigid tapping, and spindle control modes. The alarm is activated if the spindle control unit does not respond correctly to the mode change command issued by the NC.
754	SPINDLE-1 ABNORMAL TORQUE ALM	An abnormal load on the first spindle motor was detected.
761	SPINDLE-2 ALARM DETECT(AL-XX)	Refer to spindle alarm No.751(For 2nd axis).
762	SPINDLE-2 MODE CHANGE ERROR	Refer to spindle alarm No.752(For 2nd axis).
764	SPINDLE-2 ABNORMAL TORQUE ALM	Same as for alarm No.754(for the second spindle.)
771	SPINDLE-3 ALARM DETECT(AL-XX)	Same as for alarm No.751(for the third spindle.)
772	SPINDLE-3 MODE CHANGE ERROR	Same as for alarm No.752(for the third spindle.)
774	SPINDLE-3 ABNORMAL TORQUE ALM	Same as for alarm No.754(for the third spindle.)

- The details of spindle alarm No.750

The details of spindle alarm No. 750 are displayed in the diagnosis display(No. 409) as shown below.

	#7	#6	#5	#4	#3	#2	#1	#0
409					SPE	S2E	S1E	SHE

SPE 0 : In the spindle serial control, the serial spindle parameters fulfill the spindle unit startup conditions.

1 : In the spindle serial control, the serial spindle parameters do not fulfill the spindle unit startup conditions.

S2E 0 : The second spindle is normal during the spindle serial control startup.

1 : The second spindle was detected to have a fault during the spindle serial control startup.

S1E 0 : The first spindle is normal during the spindle serial control startup.

1 : The first spindle was detected to have a fault during the spindle axis serial control startup.

SHE 0 : The serial communications module in the CNC is normal.

1 : The serial communications module in the CNC was detected to have a fault.

10) System alarms(These alarms cannot be reset with reset key).

No.	Message	Contents
900	ROM PARITY	ROM parity error(CNC/OMM/Servo) Replace the number of ROM.
910	RAM PARITY : (4N)	RAM parity error in the tape memory RAM module. Clear the memory or replace the module. After this operation, reset all data including the parameters.
911	RAM PARITY : (4N+1)	RAM parity error in the tape memory RAM module. Clear the memory or replace the module. After this operation, reset all data including the parameters.
912	RAM PARITY : (4N+2)	RAM parity error in the tape memory RAM module. Clear the memory or replace the module. After this operation, reset all data including the parameters.

No.	Message	Contents
913	RAM PARITY : (4N+3)	RAM parity error in the tape memory RAM module. Clear the memory or replace the module. After this operation, reset all data including the parameters.
914	SRAM PARITY(2N)	RAM parity error for part program storage RAM or additional SRAM. Clear memory or replace the main CPU board or additional SRAM. Clear memory or replace the main CPU board or additional SRAM. Then, respecify all data including parameters.
915	SRAM PARITY(2N+1)	
916	DRAM PARITY	RAM parity error in the DRAM module. Replace the DRAM module.
920	SERVO ALARM (1/2/3/4 AXIS)	Servo alarm(1st to 4th axis). A watchdog alarm or a RAM parity error in the servo module occurred. Replace the servo control module on the main CPU board.
922	SERVO ALARM (5/6/7/8 AXIS)	Servo alarm(5th to 8th axis). A watchdog alarm or a RAM parity error in the servo module occurred.
924	SERVO MODULE SETTING ERROR	Replace the servo control module on the option 2 board. The digital servo module is not installed. Check that the servo control module or servo interface module on the main CPU or option 2 board is mounted securely.
926	SERVO ALARM (1/2/3/4/5/6 AXIS)	Servo alarm(first to sixth axis). A RAM parity error in the servo module or a watchdog alarm has occurred. Replace the servo control module on the main CPU board.
930	CPU INTERRUPT	CPU error(abnormal interrupt). The main CPU board is faulty.
950	PMC SYSTEM ALARM	Fault occurred in the PMC. The PMC control module on the main CPU board or option 3 board may be faulty.

No.	Message	Contents
951	PMC-RC WATCH DOG ALARM	Fault occurred in the PMC-RC(watchdog alarm). Option 3 board may be faulty.
970	NMI OCCURRED IN BOC	RAM parity error or NMI occurred in the PMC-RB or PMC-RA2 module.
971	NMI OCCURRED IN SLC	An alarm condition occurred in the interface with an I/O unit. For PMC-RA and PMC-RB, check that the PMC control module on the main CPU board is connected to the I/O unit securely. For PMC-RC, check that the PMC control module on the option 3 board is connected to the I/O unit is supplied with power and that the interface module is intact.
972	NMI OCCURRED IN OTHER MODULE	NMI occurred in a board other than the main CPU board.
973	NON MASK INTERRUPT	NMI occurred for an unknown reason.
974	F-BUS ERROR	BUS error of FANUC BUS. The main CPU board or option 1 to 3 boards may be faulty.
975	BUS ERROR(MAIN)	Main CPU board bus error. The main CPU board may be faulty.

11) Alarms Displayed on spindle Servo Unit

No.	Message	Contents	Remedy
"A" display	Program ROM abnormality (not installed)	Detects that control program is not started(due to program ROM not installed, etc.)	Install normal program ROM
AL 01	Motor overheat	Detects motor speed exceeding specified speed excessively.	Check load status. Cool motor then reset alarm.
AL 02	Excessive speed deviation	Detects motor speed exceeding specified speed excessively.	Check load status. Reset alarm.
AL 03	DC link section fuse blown	Detects that fuse F4 in DC link section is blown(models 30S and 40S).	Check power transistors, and so forth. Replace fuse.
AL 04	Input fuse blown. Input power open phase.	Detects blown fuse(F1 to F3), open phase or momentary failure of power(models 30S and 40S).	Replace fuse. Check open phase and power supply refenerative circuit operations.
AL 05	Control power supply fuse blown	Detects that control power supply fuse AF2 or AF3 is blown(models 30S and 40S)	Check for control power supply short circuit. Replace fuse.
AL 07	Excessive speed	Detects that motor rotation has exceeded 115% of its rated speed.	Reset alarm.
AL-08	High input voltage	Detects that switch is flipped to 200 VAC when input voltage is 230 VAC or higher(models 30S and 40S)	Flip switch to 230 VAC.
AL-09	Excessive load on main circuit section.	Detects abnormal temperature rise of power transistor radiator.	Cool radiator then reset alarm.
AL-10	Low input voltage.	Detects drop in input power supply voltage.	Remove cause, then reset alarm.

No.	Message	Contents	Remedy
AL-11	Overvoltage in DC link section	Detects abnormally high direct current power supply voltage in power circuit section	Remove cause, then reset alarm.
AL-12	Overcurrent in DC link section	Detects flow of abnormally large current in direct current section of power circuit	Remove cause, then reset alarm.
AL-13	CPU internal data memory abnormality	Detects abnormality in CPU internal data memory. This check is made only when power is turned on.	Romove cause, then reset alarm.
AL-15	Spindle switch/ output switch alarm	Detects incorrect switch sequence in spindle switch/ output switch operation.	Check sequence.
AL-16	RAM abnormality	Detects abnormality in RAM for external data. This check is made only when power is turned on.	Remove cause, then reset alarm.
AL-18	Program ROM sum check error	Detects program ROM data error. This check is made only when power is turned on.	Remove cause, then reset alarm.
AL-19	Excessive U phase current detection circuit offset	Detects excessive U phase current detection circuit offset. This check is made only when power is turned on.	Remove cause, then reset alarm.
AL-20	Excessive V phase current detection circuit offset	Detects excessive V phase current detection circuit offset. This check is made only when power in turned on.	Remove cause, then reset alarm.
AL-24	Serial transfer data error	Detects serial transfer data error(such as NC power supply turned off, etc.)	Remove cause, then reset alarm.

No.	Message	Contents	Remedy
AL-25	Serial data transfer stopped	Detects that serial data transfer has stopped.	Remove cause, then reset alarm.
AL-26	Disconnection of speed detection signal for Cs contouring control	Detects abnormality in position coder signal(such as unconnected cable and parameter setting error).	Remove cause, then reset alarm.
AL-27	Position coder signal disconnection	Detects abnormality in position coder signal(such as unconnected cable and adjustment error).	Remove cause, then reset alarm.
AL-28	Disconnection of position detection signal for Cs con-touring control	Detects abnormality in position detection signal for Cs contouring control(such as unconnected cable and adjustment error).	Remove cause, then reset alarm.
AL-29	Short-time overload	Detects that overload has been continuously applied for some period of time(such as restraining motor shaft in positioning)	Remove cause, then reset alarm.
AL-30	Input circuit overcurrent	Detects overcurrent flowing in input circuit.	Remove cause, then reset alarm.
AL-31	Speed detection signal disconnection motor restraint alarm or motor is clamped.	Detects that motor cannot rotate at specified speed or it is detected that the motor is clamped(but rotates at very slow speed or has stopped)(This includes checking of speed detection signal cable).	Remove cause, then reset alarm.
AL-32	Abnormality in RAM internal to LSI for serial data tranfer. This check is made only when power is turned on.	Detects abnormality in RAM interior LSI for serial data transfer. This check is made only when power is turned on.	Remove cause, then reset alarm.

No.	Message	Contents	Remedy
AL-33	Insufficient DC link section charging	Detects insufficient charging of direct current power supply voltage in power circuit section when magnetic contactor in amplifier is turned on(such as open phase and defective charging resistor).	Remove cause, then reset alarm.
AL-34	Parameter data setting beyond allowable range of values	Detects parameter data set beyond allowable range of values.	Set correct data.
AL-35	Exccesive gear ratio data setting	Detects gear ratio data set beyond allowable range of values.	Set correct data.
AL-36	Error counter over flow	Detects error counter overflow.	Correct cause, then reset alarm.
AL-37	Speed detector parameter setting error	Detects incorrect setting of parameter for number of speed detection pulses.	Set correct data.
AL-39	Alarm for indicating failure in detecting 1-rotation signal for Cs contouring control	Detects 1-rotation signal detection failure in Cs contouring contorl.	Make 1-rotation signal adjustment. Check cable shield status.
AL-40	Alarm for indicating 1-rotation signal for Cs contouring control not detected	Detects that 1-rotation signal has not occurred in Cs contouring control.	Make 1-rotation signal adjustment.
AL-41	Alarm for indicating failure in detecting position coder 1-rotation signal.	Detects failure in detecting position coder 1-rotation siganl.	Make signal adjustment for signal conversion circuit. Check cable shield status.

No.	Message	Contents	Remedy
AL-42	Alarm for indicating position coder 1-rotation signal not detected	Detects that position coder 1-rotation signal has not issues.	Make 1-rotation signal adjustment for signal conversion circuit.
AL-43	Alarm for indicating disconnection of position coder signal for differential speed mode	Detects that main spindle position coder signal used for differential speed mode is not connected yet(or is disconnected).	Check that main spindle position coder signal is connected to connector CN12.
AL-46	Alarm for indicating failure in detecting position coder 1-rotation signal in thread cutting operation.	Detects failure in detecting position coder 1-rotation signals in thread cutting operation.	Make 1-rotation signal adjustment for signal conversion circuit. Check cable shield status.
AL-47	Position coder signal abnormality	Detects incorrect position coder signal count operation.	Make signal adjustment for signal conversion circuit. Check cable shield status.
AL-48	Position coder 1-rotation signal abnormality	Detects that occurrence of position coder 1-rotation signal has stopped.	Make 1-rotation signal adjustment for signal conversion circuit.
AL-49	The converted differential speed is too high.	Detects that speed of other spindle converted to speed of local spindle has exceeded allowable limit in differential mode.	Check the position coder state of the other side.
AL-50	Excessive speed command calculation value in spindle synchronization control	Detects that speed command calculation value exceeded allowable range in spindle synchronization control.	Check parameters such as a position gain.

No.	Message	Contents	Remedy
AL-51	Undervoltage at DC link section	Detects that DC power supply voltage of power circuit has dropped(due to momentary power failure or loose contact of magnetic contactor).	Remove cause, then reset alarm.
AL-52	ITP signal abnormality Ⅰ	Detects abnormality in synchronization signal(ITP signal) with CNC(such as loss of ITP signal).	Remove cause, then reset alarm.
AL-53	ITP signal abnormality Ⅱ	Detects abnormality in synchronization signal (ITP signal) with CNC(such as loss of ITP signal).	Remove cause, then reset alarm.
AL-54	Overload current alarm	Detects that excessive current flowed in motor for long time.	Check if overload operation or frequent acceleration / deceleration is performed.
AL-55	Power line abnormality in spindle switching/ output switching	Detects that switch request signal does not match power line status check signal.	Check operation of magnetic contractor for power line switching. Check if power line status check signal is processed normally.

12) PC Alarm Massage

No.	ADDRESS	MESSAGE	ACTION TO BE TAKEN
2000	A0.0	AL-00 ROWER ALARM	MARK SURE CIRCUIT BRAKE
2001	A0.1	AL-01 SPINDLE ALARM	OUT OF ORDER BY SPINDLE DRIVE
2002	A0.2		
2003	A0.3	AL--3 LUBLICATION ALARM	SUPPLY OIL IN THE PUMP&PUMP FAULT
2004	A0.4	AL-04 HYDRAULIC ALARM	LOW IN HYD. PRESSURE
2005	A0.5	AL-05 AIR PRESSURE ALARM	PART CATCHER
2006	A0.6	AL-06 PART CATCHER NG	OPEN DOOR WHILE AUTOMTIC OPERATION IS BEING DONE
2007	A0.7	AL-07 DOOR OPEN/CLOSE UNABLE	SPINDLE ARRIVAL SIGNAL IS NOT OUTPUT
2010	A1.0	AL-10 SPINDLE SPEED NG	
2011	A1.1		
2012	A1.2	AL-12 ZERO RETURN START NG	AUTOMATIC PROGRAM IS IN OPERATION UPON RETURNIG TO THE HOME POSITION
2013	A1.3	AL-13 LOADER ALARM	CHECK FOR LOADER
2014	A1.4	AL-14 SPINDLE POSITION NG	ORIENTATION CONDITION CHECK
2015	A1.5	AL-15 CHUCK CLAMP UNFINISH	PROGRAM IS IN OPERATION AFTER CHUCK CLAMP IS MADE
2016	A1.6	AL-16 DOOR CLOSE UNFINISH	PROGRAM IS IN OPERATION AS THE DOOR IS CLOSED
2017	A1.7	AL-17 SPINDLE STOP NG	INFERLOR IN SPINDLE IN STOP CHECK FOR STOP SIGNAL
2020	A2.0	AL-20 BAR FEEDER NOT READY	CHECK FOR BARFEED
2021	A2.1	AL-21 COUNTER UP	COUNTER UP SIGNAL IS BEING OUTPUT RESET COUNTER
2022	A2.2	AL-22 SPINDLE DOOR INTERLOCK	DOOR IS OPENED WHILE SPINDLE IS ROTATING CLOSE DOOR
2023	A2.3	AL-23 HYD. MOTOR OVERLOAD ALAR	CHECK FOR OVERLOAD BY HYDRAULIC MOTOR
2024	A2.4	AL-24 THERMAL ALARM	CHECK FOR QM
2025	A2.5	AL-25 X-AXIS OVERTRAVEL	RELEASE O.T BY COUNTERWISE SWITCH
2026	A2.6	AL-26 Z-AXIS OVERTRAVEL	RELEASE O.T BY COUNTERWISE SWITCH
2027	A2.7	AL-27 CHIP CONVERYOR ALARM	CHECK THE CHIP CONVEYOR
2030	A3.0	AL-30 SPINDLE ORDER TIME OVER	SPINDLE ROTATE CONDITION CHECK
2031	A3.1	AL-31 SRART BUTTON ALARM	INFERIOR IN PROGRAM OPERATION S/W
2032	A3.2	AL-32 TOOL LIFE CONTROL OVER	TOOL LIFE COUNTER RESET
2033	A3.3	AL-33 NC TORQUE LIMIT ALARM	MACHINE RESTART